(12) INTERNATIONAL APPLICATION PUBLISHED UNDER THE PATENT COOPERATION TREATY (PCT)

(19) World Intellectual Property Organization
International Bureau

(43) International Publication Date
12 December 2013 (12.12.2013)

WIPO | PCT

(10) International Publication Number
WO 2013/184013 A2

(51) International Patent Classification:
H01R 13/631 (2006.01)

(21) International Application Number:
PCT/PL20 13/000076

(22) International Filing Date:
7 June 2013 (07.06.2013)

(25) Filing Language: English

(26) Publication Language: English

(30) Priority Data:
P.399465 8 June 2012 (08.06.2012) PL

(71) Applicant: **JĘDRZEJ BLAUT DESIGN** [PL/PL]; ul. Sienkiewicza 16, 43-200 Pszczyna (PL).

(72) Inventor: **BLAUT, Jedrzej;** ul. Sienkiewicza 16, 43-200 Pszczyna (PL).

(74) Agent: **J¾DRZEJEWSKI, Michal;** Jarzynka i Wspolnicy, Al. Jana Pawla II 70/36, 00-175 Warszawa (PL).

(81) Designated States *(unless otherwise indicated, for every kind of national protection available):* AE, AG, AL, AM, AO, AT, AU, AZ, BA, BB, BG, BH, BN, BR, BW, BY, BZ, CA, CH, CL, CN, CO, CR, CU, CZ, DE, DK, DM, DO, DZ, EC, EE, EG, ES, FI, GB, GD, GE, GH, GM, GT, HN, HR, HU, ID, IL, IN, IS, JP, KE, KG, KN, KP, KR, KZ, LA, LC, LK, LR, LS, LT, LU, LY, MA, MD, ME, MG, MK, MN, MW, MX, MY, MZ, NA, NG, NI, NO, NZ, OM, PA, PE, PG, PH, PL, PT, QA, RO, RS, RU, RW, SC, SD, SE, SG, SK, SL, SM, ST, SV, SY, TH, TJ, TM, TN, TR, TT, TZ, UA, UG, US, UZ, VC, VN, ZA, ZM, ZW.

(84) Designated States *(unless otherwise indicated, for every kind of regional protection available):* ARIPO (BW, GH, GM, KE, LR, LS, MW, MZ, NA, RW, SD, SL, SZ, TZ, UG, ZM, ZW), Eurasian (AM, AZ, BY, KG, KZ, RU, TJ, TM), European (AL, AT, BE, BG, CH, CY, CZ, DE, DK, EE, ES, FI, FR, GB, GR, HR, HU, IE, IS, IT, LT, LU, LV, MC, MK, MT, NL, NO, PL, PT, RO, RS, SE, SI, SK, SM, TR), OAPI (BF, BJ, CF, CG, CI, CM, GA, GN, GQ, GW, KM, ML, MR, NE, SN, TD, TG).

Published:

— *without international search report and to be republished upon receipt of that report (Rule 48.2(g))*

(54) Title: DOUBLE-SIDED USB TYPE A SOCKET

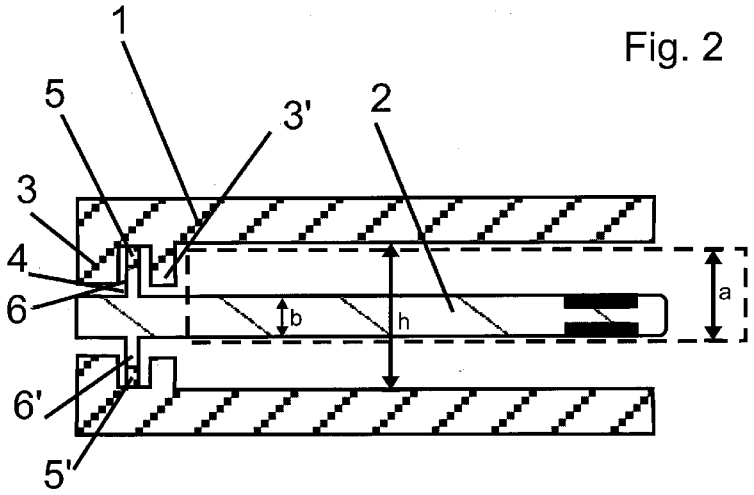

(57) Abstract: The object of the invention are double- sided USB type A sockets that allow for easy insertion of USB type A plugs, regardless of their orientation relative to the socket.

WO 2013/184013 A2

Double-sided USB Type A Socket

The object of the invention comprises of a Double-sided USB Type A sockets. They can be used in the broadly defined functional electronics, in particular in computer and audio-video equipment.

Universal Serial Bus (USB) is a type of hardware communication port for computers or other electronic devices that is a replacement for the obsolete serial and parallel ports. USB ports are universal in the sense that they can be used to connect a number of different devices (e.g. a printer, a camcorder, a camera, etc.) to a PC. The connected devices are usually automatically detected and recognised by the system that allows for mostly automated installation and configuration of the drivers. USB ports also allow to connect and disconnect the devices without turning off or rebooting the PC or another device (e.g. a TV).

The majority of modern operating systems supports USB sockets - this includes Microsoft systems from Windows 95 OSR2 onwards (there also exists a patch to the OSR1 version that provides USB support), Windows NT family (beginning with version 5.0), systems based on the Linux kernel, BSD family systems and Mac OS.

A USB port transmits data via two wires (green *Data+* and white *Data-).* The bus also includes a power wire (red +5V DC wire and black ground wire) with a voltage of 5 V. In the case of mini and micro USB plugs (the 5-pin plugs shown in the above picture) the wiring diagram is

slightly different than that presented in the table below. For mini and micro USB, the pin marked as 4 is not connected (NC) and the pin 5 is GND (black wire).

There are several known types of USB sockets that are designed to insert plugs connected to the USB port, of which type A socket is most popular.

A common problem with the use this type of socket is inserting the plug into the socket in an incorrect orientation, particularly if the user inserts the plug inserted into the socket without looking. The double-sided sockets according to the invention provide solution to this problem.

The double-sided USB type A socket consisting of a housing and one strip with pins is, according to the invention, characterised in that the height of the inside of the housing can be represented by the following formula $h \geq 2a - b$, where h is the height of the inside of the housing, a is the height of the USB type A plug, and b is the height/thickness of the strip with pins, and the strip houses two asymmetrically arranged sets of pins, one set for each of the two flat surfaces of the strip.

In another aspect, the object of the invention is the double-sided USB type A socket consisting of a housing and one strip with pins, characterised in that the height of the inside of the housing can be represented by the following formula $h \geq a + b$, where h is the height of the inside of the housing, a is the height of the USB type A plug, and b is the height/thickness of the strip, and the strip houses two asymmetrically arranged sets of pins, one set for each of the two flat surfaces of the strip, and the back face of the housing consists of two non-adjacent walls in the

central area of which a through-hole is made, in the space between the walls there is at least one spring element attached to the top face of the housing and at least one spring element is attached to the bottom face of the housing, and additionally, each horizontal surface of the strip with pins is equipped with a vertical element inserted into the space between the walls and supported by the respective spring elements.

In another aspect, the object of the invention is the double-sided USB type A socket consisting of a housing and one strip with pins that is, according to the invention, characterised in that the height of the inside of the housing can be represented by the following formula $h \geq a + b$, where h is the height of the inside of the housing, a is the height of the USB type A plug, and b is the height/thickness of the strip with pins, and the strip houses two asymmetrically arranged sets of pins, one set for each of the two flat surfaces of the strip, and in the back of the strip there is a bar linkage that allows vertical bending of the strip, whereas the length of the bendable part of the strip is at least equal to the depth of the inside of the USB plug type A.

Preferably, the bar linkage is located at the back face of the housing.

In another aspect, the invention relates to the double-sided USB type A socket consisting of a housing and one strip with pins, characterised in that the height of the inside of the housing is at least equal to the height/thickness of the USB type A plug, and additionally it includes a second strip with pins and each set of the pins is located on the flat surfaces of the strips that face each other, wherein the back face of the housing includes at least two blind holes, each equipped with at least one spring element and is long enough to allow an inserted strip to be slid in.

Preferably, the inlets of the holes are narrower than their insides, and the flat surfaces of the strips, which in initial position are inside the holes,

include at least one ridge that prevents the respective strip from sliding out of the hole when the USB plug is pulled out.

Another form of the invention is the double-sided USB type A socket consisting of the cylindrical outer and inner housing that includes the USB type A port, characterised in that the dowels placed between the surfaces of the adjacent housings allow the internal housing to rotate by 180° and the rotation of the internal housing is guided via the formed hollow, and additionally, under the internal housing there is a spring element that allows the internal socket to return to initial position if a plug is inserted into the USB type A socket.

Preferably, the rotation mechanism located on the surface of the adjacent housings allows the internal housing to rotate, and the spring element located between the housings allows the socket to return to initial position.

The invention is presented in the following figures: fig. 1 shows the cross section of the first variant of the double-sided USB type A socket, fig. 2 shows the cross section of the second variant of the double-sided USB type A socket, fig. 3 shows the cross section of the third variant of the double-sided USB type A socket, fig. 4 shows the cross section of the fourth variant of the double-sided USB type A socket, and fig. 5 shows the axonometric projection of the fifth variant of the double-sided USB type A socket.

In the first variant, the double-sided USB type A socket consists of the housing (1) and one strip (2) with pins. The height of the inside of the housing (1) can be represented by the following formula $h \geq 2a - b$, where h is the height of the inside of the housing, a is the height

of the USB type A plug, and b is the height/thickness of the strip (2) with pins. The strip houses two asymmetrically arranged sets of pins, one set for each of the two flat surfaces of the strip.

In the second variant of the double-sided USB type A socket, the height of the inside of the housing (1) can be represented by the following formula $h \geq a + b$, where h is the height of the inside of the housing, a is the height of the USB type A plug, and b is the height/thickness of the strip (2), and the strip (2) houses two asymmetrically arranged sets of pins, one set for each of the two flat surfaces of the strip (2). The back face of the housing (1) consists of two non-adjacent walls (3; 3') in the central area of which a through-hole (4) is made, in the space between the walls there is at least one spring element (5) attached to the top face of the housing and at least one spring element (5') is attached to the bottom face of the housing, and additionally, each horizontal surface of the strip (2) with pins is equipped with a vertical element (6; 6') inserted into the space between the walls (3; 3') and supported by the respective spring elements (5; 5').

In the third variant, the double-sided USB type A socket consists of the inside housing (1) whose height can be represented by the following formula $h \geq a + b$, where h is the height of the inside of the housing, a is the height of the USB type A plug, and b is the height/thickness of the strip (2). The strip houses two asymmetrically arranged sets of pins, one set for each of the two flat surfaces of the strip. In the back of the strip (3) there is a bar linkage (7) that allows vertical bending of the strip, whereas the bar linkage (7) is located at the back face of the housing and the length of the bendable part of the strip is at least equal to the depth of the inside of the USB plug type A. (l).

In the fourth variant, the double-sided USB type A socket consists of the inside housing (1) whose height is at least equal to the thickness of the USB type A plug, and additionally it includes a second strip (2') with pins and each set of the pins is located on the flat surfaces of the strips (2; 2') that face each other, wherein the back face of the housing (1) includes at least two blind holes (8; 8'), each equipped with at least one spring element (9; 9') and is long enough to allow an inserted strip (2; 2') to be slid in. The mouths of the holes (8; 8') are narrower than their insides, and the flat surfaces of the strips (2; 2'), which in initial position are inside the holes (8; 8'), include at least one ridge (10; 10') that prevents the respective strip from sliding out of the hole (8; 8') when the USB plug is pulled out.

In the fifth variant, the double-sided USB type A socket consists of the cylindrical external (11) and internal (12) housing that includes the USB type A port (13). The dowels (14) placed between the surfaces of the adjacent housings (11; 12) allow the internal housing to rotate by 180° and the rotation of the internal housing is guided via the formed groove (15), and additionally, under the internal housing there is a spring element (16) that allows the internal socket to return to initial position if a plug is inserted into the USB type A socket. The rotation mechanism located on the surface of the adjacent housings allows the internal housing to rotate, and the spring element located between the housings allows to the socket to return to initial position.

Patent claims

1. The double-sided USB type A socket consisting of a housing and one strip with pins, **characterised in that** the height of the inside of the housing (1) can be represented by the following formula $h \geq 2a - b$, where h is the height of the inside of the housing, a is the height of the USB type A plug, and b is the height/thickness of the strip (2) with pins, and the strip houses two asymmetrically arranged sets of pins, one set for each of the two flat surfaces of the strip.
2. The double-sided USB type A socket consisting of a housing and one strip with pins, **characterised in that** the height of the inside of the housing (1) can be represented by the following formula $h \geq a + b$, where h is the height of the inside of the housing, a is the height of the USB type A plug, and b is the height/thickness of the strip (2), and the strip (2) houses two asymmetrically arranged sets of pins, one set for each of the two flat surfaces of the strip (2), and the back face of the housing (1) consists of two non-adjacent walls (3; 3') in the central area of which a through-hole (4) is made, in the space between the walls there is at least one spring element (5) attached to the top face of the housing and at least one spring element (5') is attached to the bottom face of the housing, and additionally, each horizontal surface of the strip (2) with pins is equipped with a vertical element (6; 6') inserted into the space between the walls (3; 3') and supported by the respective spring elements (5; 5').
3. The double-sided USB type A socket consisting of a housing and one strip with pins, **characterised in that** the height of the inside of the housing can be represented by the following formula $h \geq a + b$,

where h is the height of the inside of the housing, a is the height of the USB type A plug, and b is the height/thickness of the strip (2) with pins, and the strip houses two asymmetrically arranged sets of pins, one set for each of the two flat surfaces of the strip, and in the back of the strip (3) there is a bar linkage (7) that allows vertical bending of the strip, whereas the length of the bendable part of the strip is at least equal to the depth of the inside of the USB plug type A.

4. The double-sided USB type A socket according to claim 3, **characterised in that** the bar linkage is located in the back face of the housing (1).

5. The double-sided USB type A socket consisting of the housing and one strip with pins, **characterised in that** the height of its inside housing is at least equal to the thickness of the USB type A plug, and additionally it includes a second strip (2') with pins and each set of the pins is located on the flat surfaces of the strips (2; 2') that face each other, wherein the back face of the housing (1) includes at least two blind holes (8; 8'), each equipped with at least one spring element (9; 9') and is long enough to allow an inserted strip (2; 2') to be slid in.

6. The double-sided USB type A socket according to claim 5, **characterised in that** the mouths of the holes (8; 8') are narrower than their insides, and the flat surfaces of the strips (2; 2'), which in initial position are inside the holes (8; 8'), include at least one ridge (10; 10') that prevents the respective strip from sliding out of the hole (8; 8') when the USB plug is pulled out.

7. The double-sided USB type A socket consisting of the cylindrical outer (11) and inner (12) housing that includes the USB type A port

(13), **characterised in that** the dowels (14) placed between the surfaces of the adjacent housings (11;12) allow the internal housing to rotate by 180° and the rotation of the internal housing is guided via the formed groove (15), and additionally, under the internal housing there is a spring element (16) that allows the internal socket to return to initial position if a plug is inserted into the USB type A socket.

8. The double-sided USB type A socket according to claim 7, **characterised in that** the rotation mechanism located on the surface of the adjacent housings allows the internal housing to rotate, and the spring element located between the housings allows the socket to return to initial position.

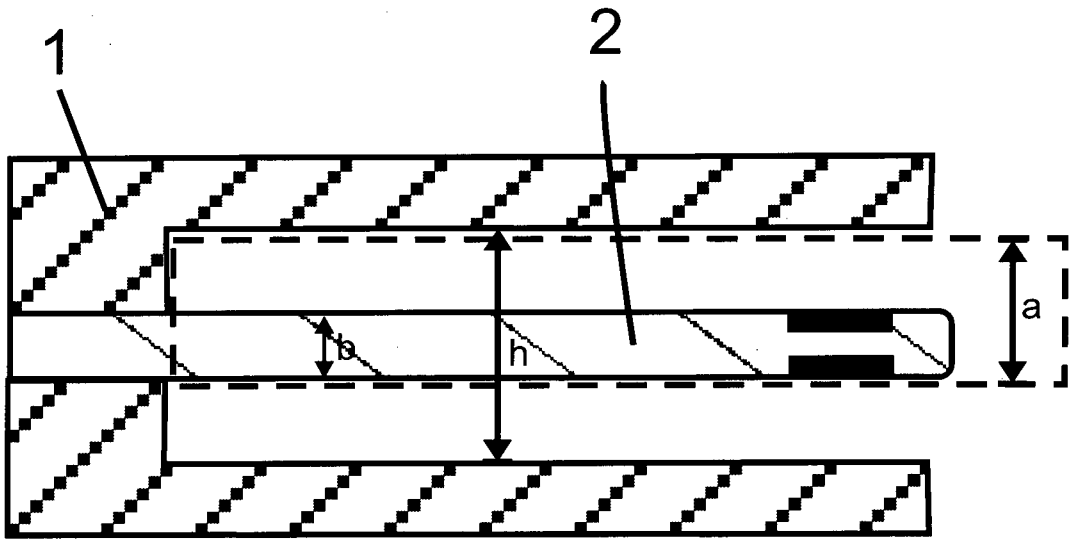

Fig. 1

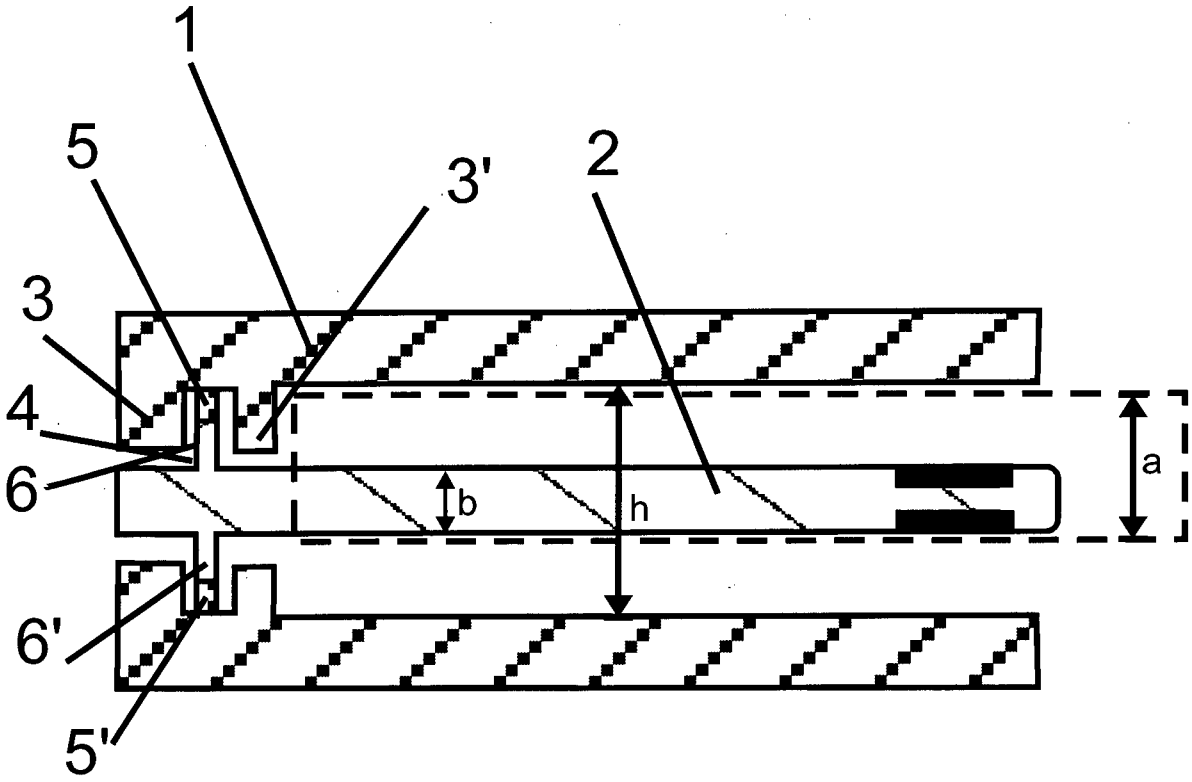

Fig. 2

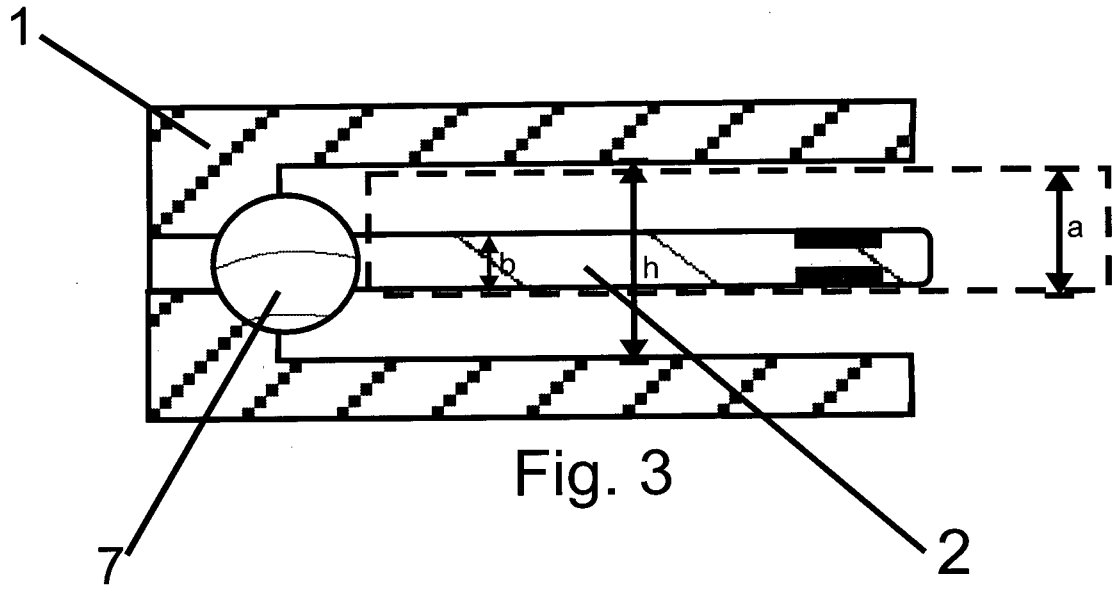

Fig. 3

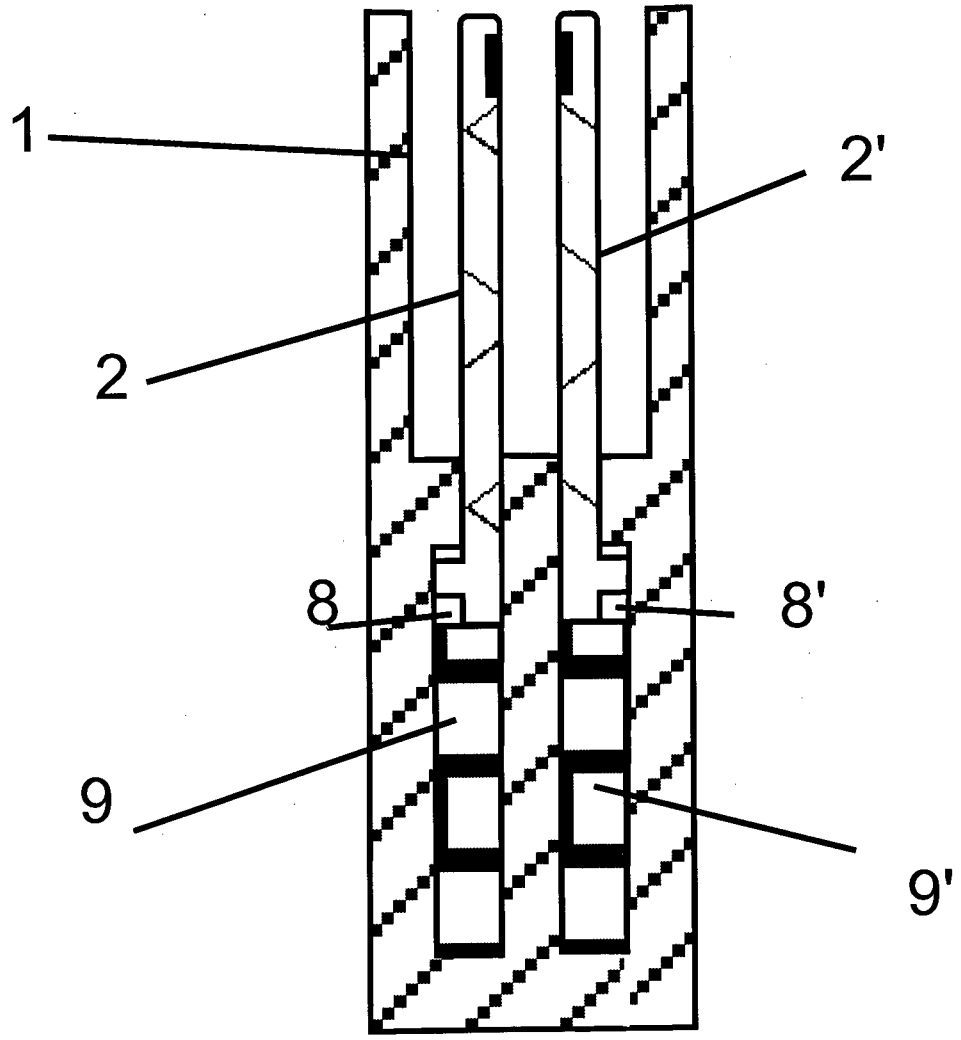

Fig. 4

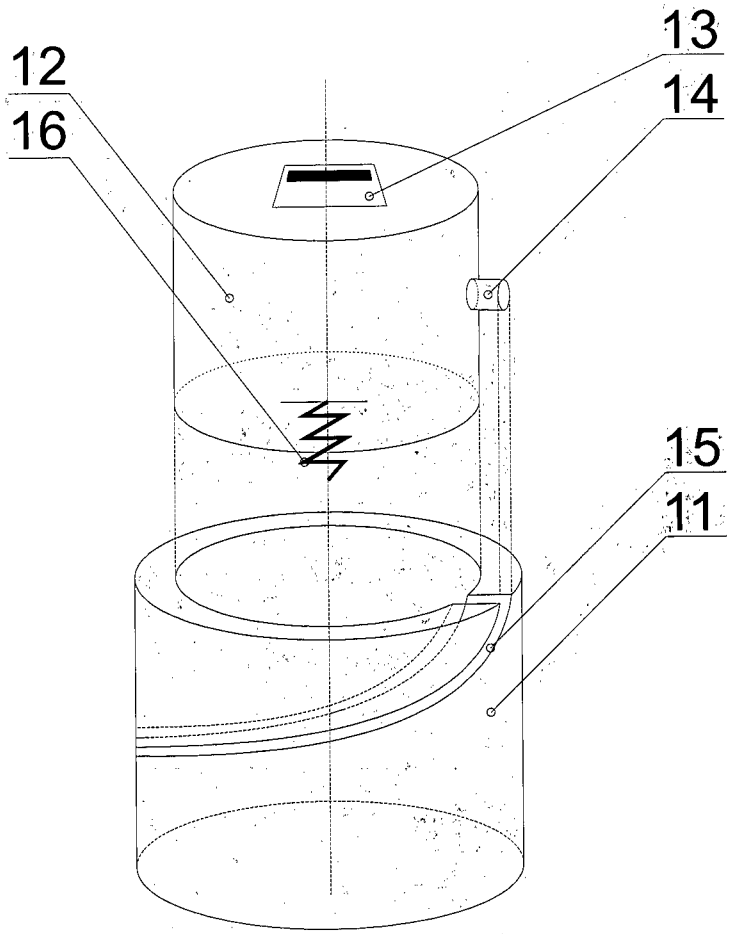

Fig. 5