(12) INTERNATIONAL APPLICATION PUBLISHED UNDER THE PATENT COOPERATION TREATY (PCT)

(19) World Intellectual Property Organization
International Bureau

(43) International Publication Date
14 August 2008 (14.08.2008)

PCT

(10) International Publication Number
WO 2008/097114 Al

(51) International Patent Classification:
H05B 37/02 (2006.01)

(21) International Application Number:
PCT/PL2008/000012

(22) International Filing Date: 8 February 2008 (08.02.2008)

(25) Filing Language: English

(26) Publication Language: English

(30) Priority Data:
P-381717 8 February 2007 (08.02.2007) PL

(71) Applicant *(for all designated States except US)*: **ES-SYSTEM** S.A. [PL/PL]; ul. Przemyslowa 2, PL-30-701 Krakow (PL).

(72) Inventors; and
(75) Inventors/Applicants *(for US only)*: **PILSZCZEK, Boguslaw** [PL/PL]; ul. Widna 14, PL-31-464 Krakow (PL). **ZAWADZKI, Artur** [PL/PL]; ul. Okolna 8 m. 45, PL-30-684 Krakow (PL).

(74) Agent: **GUBALA, Józef;** Biuro Patentów i Znaków Towarowych Faktor Q, ul. Juliusza Lea 53/84, PL-30-052 Krakow (PL).

(81) Designated States *(unless otherwise indicated, for every kind of national protection available)*: AE, AG, AL, AM, AO, AT, AU, AZ, BA, BB, BG, BH, **BR,** BW, BY, BZ, CA, CH, CN, CO, CR, CU, CZ, DE, DK, DM, DO, DZ, EC, EE, EG, ES, FT, GB, GD, GE, GH, GM, GT, HN, **HR,** HU, **ID,** IL, IN, IS, **JP,** KE, KG, KM, KN, KP, KR, KZ, LA, LC, LK, LR, LS, LT, LU, LY, MA, MD, ME, MG, MK, MN, MW, MX, MY, MZ, NA, NG, NI, NO, NZ, OM, PG, PH, PL, PT, RO, RS, RU, SC, SD, SE, SG, SK, SL, SM, SV, SY, TJ, TM, TN, TR, TT, TZ, UA, UG, US, UZ, VC, VN, ZA, ZM, ZW

(84) Designated States *(unless otherwise indicated, for every kind of regional protection available)*: ARIPO (BW, GH, GM, KE, LS, MW, MZ, NA, SD, SL, SZ, TZ, UG, ZM, ZW), Eurasian (AM, AZ, BY, KG, KZ, MD, RU, TJ, TM), European (AT, BE, BG, CH, CY, CZ, DE, DK, EE, ES, FI, FR, GB, GR, HR, HU, IE, IS, IT, LT, LU, LV, MC, MT, NL, NO, PL, PT, RO, SE, SI, SK, TR), OAPI (BF, BJ, CF, CG, CI, CM, GA, GN, GQ, GW, ML, MR, NE, SN, TD, TG).

Published:
— *with international search report*
— *before the expiration of the time limit for amending the claims and to be republished in the event of receipt of amendments*

(54) Title: METHOD AND SYSTEM OF REMOTE LIGHTING CONTROL

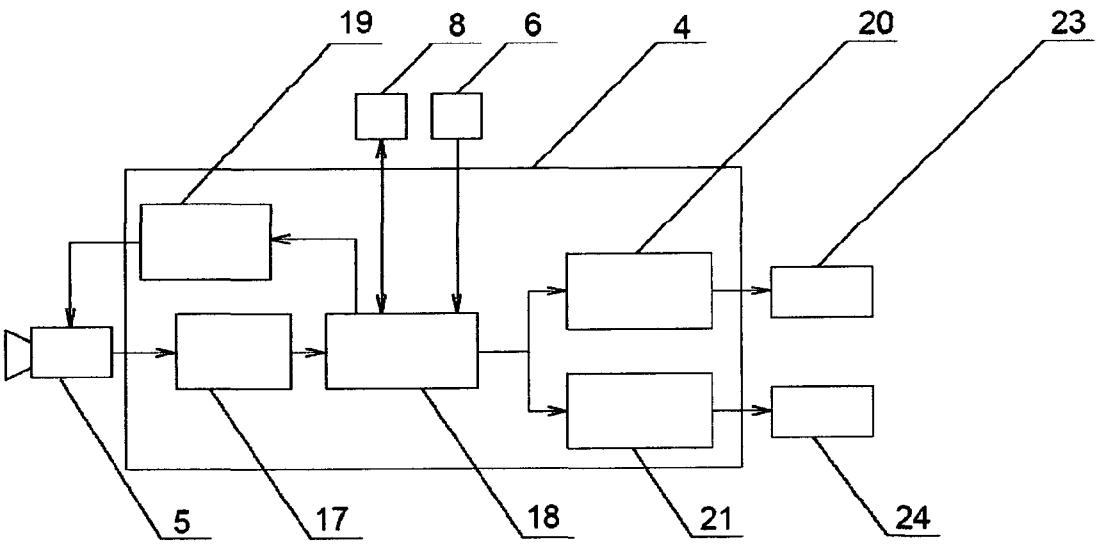

(57) Abstract: The system of remote lighting control comprises a moving lighting fitting and an indicator, wherein the lighting fitting (1) is fitted with the source of light (2) connected with the light source power supply (3) and the electronic control system (4) connected with the camera (5), with the sensor activating the fitting (6) and with the drive assembly (7). Also, there is disclosed the method of remote lighting control.

WO 2008/097114 A1

Method and system of remote lighting control

The present invention relates to a method and system of remote lighting control, especially of lighting commercial and conference facilities and objects of historical value.

It is known from the Japanese patent description, JP73 12296, the system for remote lighting control. The objective of this solution is to facilitate spot light control. This system comprises a device for altering direction of light and a control device. In order to change direction of light, the control device transmits signal of changing direction wireless to the device for altering direction of light. The device used for altering direction of light includes an element receiving the wireless-sent signal for altering direction and an element assessing direction from which this signal comes. At the time of sending the signal by the control device from the place where light should be directed, the receiving element receives this signal and the assessing element assesses the direction from which the signal comes, and then the device for changing direction of light changes direction of light to where the received signal comes from. Thus, a wireless control device is sufficient to change direction of light. The disadvantage of the described solution is mostly the fact that light may be directed only to the site of the control device, thus this device must be each time located in the place to be lit.

From the international publication No. WO02/16824, it is known the method and system of controlling direction, preferably also intensity of lighting. This system comprises the indicating device, which assigns the place and direction of changes in the location of light, the receiving device which receives the signal transmitted by the indicating device and the control device which directs the source of light to the place indicated by the control device. This solution requires preparing the appropriate room provided with a properly located, fixed permanently, cameras or other detectors tracking the indicating device. The solution requires exact adjustment of the method of controlling sources of light to specific rooms, as it comprises separate units detecting the indicating device, the sources of light and the main control unit, and light is directed directly to the indicator, and not to the place indicated by it.

There are known lighting fittings of an ability to move, such as systems of disco or stage lighting wherein the movement is controlled by the operator or with a pre-

programmed computer, or their movement is dependent on sound intensity or volume. These solutions allow only simple movement of the fittings.

The disadvantage of the known solutions is lack of the possibility of remote determination of a site where light is to be directed. The solution according to the invention allows remote direction of light to a site remote from the indicator operator, which allows making easy and fast changes in lighting. The known solutions cannot acquire visual information from cameras integrated with the lighting fitting with simultaneous direction of light to the sites indicated remotely.

The technical issue which needs solution is development of a new method of remote lighting control, which would allow remote directing of light from a moving lighting fitting to a facility selected with a laser indicator.

The technical issue which needs solution is development of a new system of remote lighting control, which would allow remote directing of light from a moving lighting fitting to a facility selected with a laser indicator.

The solution embodied in the method of remote lighting control, according to the invention, consists in the fact that first, after connecting the power supply to the lighting fitting, the camera and step motor controllers configuration stage starts. Then, the remote lighting control system enters the state of waiting for activation, which occurs by lighting the sensor activating the fitting with a laser indicator. When the laser spot is within the camera's field of vision, the lighting fitting changes its position so that the laser spot emitted by the laser indicator is in the centre of the area lit by the lighting fitting. By the meaning of 'laser spot' it should understood any light mark on the objects, emitted by a laser indicator. Movement of the laser spot causes movement of the light beam emitted by the lighting fitting so that the laser spot is always in the centre of the area lit by the lighting fitting. When the laser spot fades or when the laser spot is not in field of vision of the camera, the lighting fitting, after a defined time, moves into the condition of waiting for activation. Additionally, after the lighting fitting is activated, it can move for a defined time within the range of movement defined by the α and β angles in order to find the laser spot and then be positioned so that the found laser spot emitted by the laser indicator is in the centre of the area lit by the lighting fitting. Movement of the laser spot causes movement of the light beam emitted by the lighting fitting so that the laser spot is always in the centre of the area lit by the lighting fitting.

When the laser spot fades or when it is not in field of vision of the camera, the lighting fitting, after a defined time, enters the state of waiting for another activation. When the laser spot is not detected on searching, the lighting fitting automatically returns to the position preceding the activation and enters the state of waiting for another activation.

The remote lighting control system according to the invention features is characterized in that the system is equipped with known remote laser indicator of any wavelength of the emitted light in the visual range, and the lighting fitting is fitted with a source of light connected with a light source power supply and an electronic control system connected with a camera, a sensor activating the fitting and a drive assembly. The electronic control system is additionally connected with a sound signalling device, preferably a piezoelectric speaker, as well as with any known communication module. The lighting fitting has a fixing element installed on a rotating output shaft from the gear, preferably worm and cone gear, allowing to reach rotation of the fitting with the rotation range $\beta = 360$ degrees, and is provided with a source of light and a camera, which are set on a common output shaft from the gear, preferably worm gear, allowing to reach movement of a deflecting source of light with the range of $\alpha = 90$ degrees, while the theoretical optical axis of the light source is parallel to the theoretical optical axis of the camera. The sensor activating the fitting is made of a photo-resistor covered with an optical filter. The electronic control system comprises input buffers to which the camera is connected, connected with the main microcontroller, which is additionally connected with the camera through the microcontroller controlling the camera. The main microcontroller is connected with the sensor activating the fitting and two independent step motor controllers, and each of the listed elements of the system is powered from a power supply unit (not shown) for the control system and step motors. The lens of the camera on the external side is provided with a selective filter used for observation of the laser spot, adjusted to the wavelength of the light emitted by the laser indicator. The drive assembly has two step motors connected through the gear with output shafts, perpendicular to each other, which in turn are connected with the electronic control system. The step motor controllers support the motors in steps, preferably in the micro-step procedure. One of the step motors is connected by means of the worm gear and the cone gear with the output shaft with the $\beta = 360$ degrees range of movement, and the other step motor is connected by means of the worm gear with the

output shaft with the $\alpha = 90$ degrees range of movement, in which the source of light and the camera are set. The stages of accelerating and braking the step motors run smooth in accordance with the trapezoid curve. The communication module allows connection of an electronic control system to a external control unit (not shown), preferably to a computer, which allows making changes of parameters of the main microcontroller, the camera and the controllers of step motors, and for connection of the lighting fitting with other lighting fittings and execution of movement programs of an individual lighting fitting or of sets of fittings connected with each other.

The advantage of the method and system according to the invention is the possibility of touchless changing of position of the lighting fitting, which is especially important due to the possibility of occurrence of high temperature of the light source and lack of the possibility of frequent switching the light source off to cool it down. The solution according to the invention allows the remote control of the lighting fitting without necessity of adjustment of the room in which it is located, and without the necessity of prior determination of fitting position in the space in reference to the camera. The lighting fitting according to the invention is a fully autonomous unit, which, after hanging up at any location in the room, is ready for independent functioning. The system according to the invention allows connection of lighting fittings into sets in which each fitting may be controlled independently by means of a laser indicator.

The subject matter of the invention shall be explained in more detail with the embodiment example shown on the drawing, where Fig. 1 presents the block chart of the method of remote lighting control, Fig. 2 presents the block chart of the system of remote lighting control, Fig. 3 presents the lighting fitting in general front view with visible theoretical optical axes of the light source and camera, Fig. 4 presents the lighting fitting in general side view with the marked range of movement $\alpha = 90$ degrees, Fig. 5 presents the lighting fitting in general top view with the marked range of movement $\beta = 360$ degrees, Fig. 6 presents the lighting fitting in general front view with the marked position for fixing the camera, Fig. 7 presents a part of the lighting fitting in longitudinal cross section along the A-A line on Fig. 6.

Example

The method of remote lighting control according to the invention comprises the

stages wherein, following connecting power supply to the lighting fitting 1, starts the stage of configuration of the camera 5 and of the step motor controllers 20, 21, and then the system of remote lighting control enters the state of waiting for activation. Activation of the lighting fitting 1 is done by lighting the sensor activating the fitting 6 with the laser indicator. When the laser spot is within the camera's 5 field of vision, the lighting fitting 1 changes its position so that the laser spot emitted by the laser indicator is in the centre of the area lit by the lighting fitting 1. Movement of the laser spot causes movement of the light beam emitted by the lighting fitting 1 so that the laser spot is always in the centre of the area lit by the lighting fitting 1. When the laser spot fades or when the laser spot is not in field of vision of the camera 5, the lighting fitting 1, after a defined time, enters the condition of waiting for another activation. When the laser spot after activation is not within the field of vision of the camera 5 within a defined time, the lighting fitting 1 may preferably move in the range specified by the angles α and β in order to find it. When the laser spot is found, the lighting fitting 1 is positioned so that the spot is in the centre of the area lit by the lighting fitting 1. When the laser spot is not found on searching, the lighting fitting 1 automatically returns to the position preceding the activation and enters the state of waiting for another activation.

The system of remote lighting control comprises a moving lighting fitting 1 and a laser indicator (not shown) of any wavelength of emitted light in the visual range. The lighting fitting 1 is fitted with a source of light 2 connected with the power supply unit of the light source 3 and the electronic control system 4 connected with the camera 5, with the sensor activating the fitting 6 and the drive assembly. The electronic control system 4 is additionally connected with a sound signalling device (not shown), preferably a piezoelectric speaker, as well as with any known communication module 8. The lighting fitting has a fixing element 9 installed on a rotating output shaft 10 from the gear, preferably worm 11 and cone gear 12, allowing rotation of the fitting with the rotation range $\beta = 360$ degrees, and is provided with a source of light 2 and a camera 5, which are set on a common output shaft 13 from the gear, preferably worm gear 14, allowing movement of a deflecting source of light with the range of $\alpha = 90$ degrees. The theoretical optical axis of the light source 25 is parallel to the theoretical optical axis of the camera 26. The used gears 11 and 14 feature self-braking capacity, thus allowing the fitting to maintain the same position when both the power supply for the step motors

and the entire fitting are deprived of power supply. The sensor activating the fitting 6 preferably is made of the photo-resistor 15 covered with the optical filter 16. The electronic control system 4 comprises the input buffers 17, which adjust working voltage of the camera 5 and of the other elements of the system to which the camera 5 is connected. The input buffers 17 are connected to the main microcontroller 18, which is additionally connected to the camera 5 through the microcontroller controlling the camera 19. The main microcontroller 18 is connected with the sensor activating the fitting 6 and two independent step motor controllers 20, 21. Each of the listed elements of the system is powered from a power supply unit (not shown) for the control system and step motors. The lens of the camera 5 on the external side are provided with a selective filter 22 used for observation of the laser spot, adjusted to the wavelength of the light emitted by the laser indicator. The drive assembly 7 has two step motors 23, 24 connected by means of the gears 11, 12, 14 with the output shafts 10, 13, perpendicular to each other and connected with the step motor controllers 20, 21, which form part of the electronic control system 4. The step motor controllers support the step motors in the micro-step procedure, which allows reduction of noise generated during their operation. One of the step motors 23 is connected by means of the worm gear 11 and the cone gear 12 with the output shaft 10 with the $\beta = 360$ degrees range of movement, and the other step motor 24 is connected by means of the worm gear 14 with the output shaft 13 with the $\alpha = 90$ degrees range of movement, in which the source of light 2 and the camera 5 are set. The stages of accelerating and braking of the step motors run in accordance with the trapezoid curve, which allows smooth execution of their movement and application of motors with smaller power rating to obtain the required dynamics of movement. The communication module 8 allows connection of the electronic control system 4 with a external control unit (not shown), preferably with a computer, which allows making changes of parameters of the main microcontroller 18, the camera 5 and the controllers of the step motors 20, 21, and for connection of the lighting fitting 1 with the other lighting fittings and execution of movement programs of an individual lighting fitting 1 or of sets of fittings connected each to other.

Claims

1. The method of remote lighting control, characterized in that first, after connecting power supply to the lighting fitting (1), the stage of configuration of the camera (5) and of the step motor controllers (20, 21) is executed, and then the remote lighting control system enters the state of waiting for activation, which occurs by lighting the sensor (6) activating the fitting (1) with a laser indicator; when the laser spot is within the field of vision of the camera (5), the lighting fitting (1) changes its position so that the visible laser spot emitted by the laser indicator is in the centre of the area lit by the lighting fitting (1), whereas movement of the laser spot causes movement of the light beam emitted by the lighting fitting (1) so that the laser spot is always in the centre of the area lit by the lighting fitting (1); when the laser spot fades or when it is not in the field of vision of the camera (5), the lighting fitting (1), after a defined time, enters the state of waiting for another activation.

2. The method according to claim 1, characterized in that, preferably after activation, in order to find the laser spot, the lighting fitting (1) moves for a defined time within the range of movement specified by the α and β angles, and when it finds it, it is positioned so that the found laser spot emitted by the laser indicator is in the centre of the area lit by the lighting fitting (1), whereas movement of the laser spot causes movement of the light beam emitted by the lighting fitting (1) so that the laser spot is always in the centre of the area lit by the lighting fitting (1); when the laser spot fades or when it is not in the field of vision of the camera (5), the lighting fitting (1) following defined time enters the state of waiting for another activation, whereas if the laser spot is not found when searched for, the lighting fitting (1) automatically returns to the position preceding the activation and enters the state of waiting for another activation.

3. The system of remote lighting control equipped with a moving lighting fitting and an indicator, characterized in that, it coprises the laser indicator of any wavelength of emitted light within the visible range, and the lighting fitting (1) is fitted with the source of light (2) connected with the light source power supply (3) and the electronic control system (4) connected with the camera (5), with the sensor activating the fitting (6) and with the drive assembly (7).

4. The system according to claim 3, characterized in that, the electronic control system (4) is additionally connected with the sound signalling device, preferably the piezoelectric speaker.

5. The system according to claims 3 or 4, characterized in that, the electronic control system (4) is additionally connected with any known communication module (8).

6. The system according to claims 3, 4 or 5, characterized in that, the lighting fitting has the fixing element (9) installed on the rotating output shaft (10) from the gear, preferably the worm gear (11) and the cone gear (12), which allows obtaining rotating movement of the fitting in the rotation range β = 360 degrees, as well as is provided with the source of light (2) and the camera (5), which are set on the common output shaft (13) from the gear, preferably the worm gear (14), which allows obtaining of movement deflecting the light source in the range of α = 90 degrees, while the theoretical optical axis of the light source (25) is parallel to the theoretical optical axis of the camera (26).

7. The system according to claims 3 or 6, characterized in that, the sensor activating the fitting (6) comprises preferably the photo-resistor (15) covered by the optical filter (16).

8. The system according to claims 3 or 7, characterized in that, the electronic control system (4) comprises the input buffers (17) to which the camera (5) is connected, connected with the main microcontroller (18), which is additionally connected with the camera (5) through the microcontroller controlling the camera (19), while the main microcontroller (18) is connected with the sensor activating the fitting (6) and with the two independent step motor controllers (20, 21), and each of said elements of the system is powered with the power supply unit for the control system and for the step motors.

9. The system according to claims 3 or 8, characterized in that, the lens of the camera (5) on the external side is provided with the selective filter (22) for tracking the laser spot, adjusted to the wavelength of light emitted by the laser indicator.

10. The system according to claims 3 or 9, characterized in that, the drive assembly (7) has two step motors (23, 24) connected by means of the gear (11, 12, 14) with the output shafts (10, 13), perpendicular to each other, which are connected with

the electronic control system (4).

11. The system according to claims 3 or 10, characterized in that, the step motor controllers support the step motors in the micro-step mode.

12. The system according to claims 3 or 11, characterized in that, one of the step motors (23) is connected by means of the worm gear (11) and the cone gear (12) with the output shaft (10) with the range of movement β = 360 degrees, and the other step motor (24) is connected by means of the worm gear (14) with the output shaft (13) with the range of movement α = 90 degrees, in which the source of light (2) and the camera (5) are set.

13. The system according to claims 3 or 12, characterized in that, the stages of accelerating and braking the step motors run smooth in accordance with the trapezoid curve.

14. The system according to claims 3 or 13, characterized in that, the communication module (8) allows connection of the electronic control system (4) to the external control unit, preferably to a computer, which allows making changes of the parameters of the main microcontroller (18), the camera (5) and the step motor controllers (20, 21), connection of the lighting fitting (1) with the other lighting fittings, as well as execution of programs of movement of the single lighting fitting (1) or of their set made by joining them together.

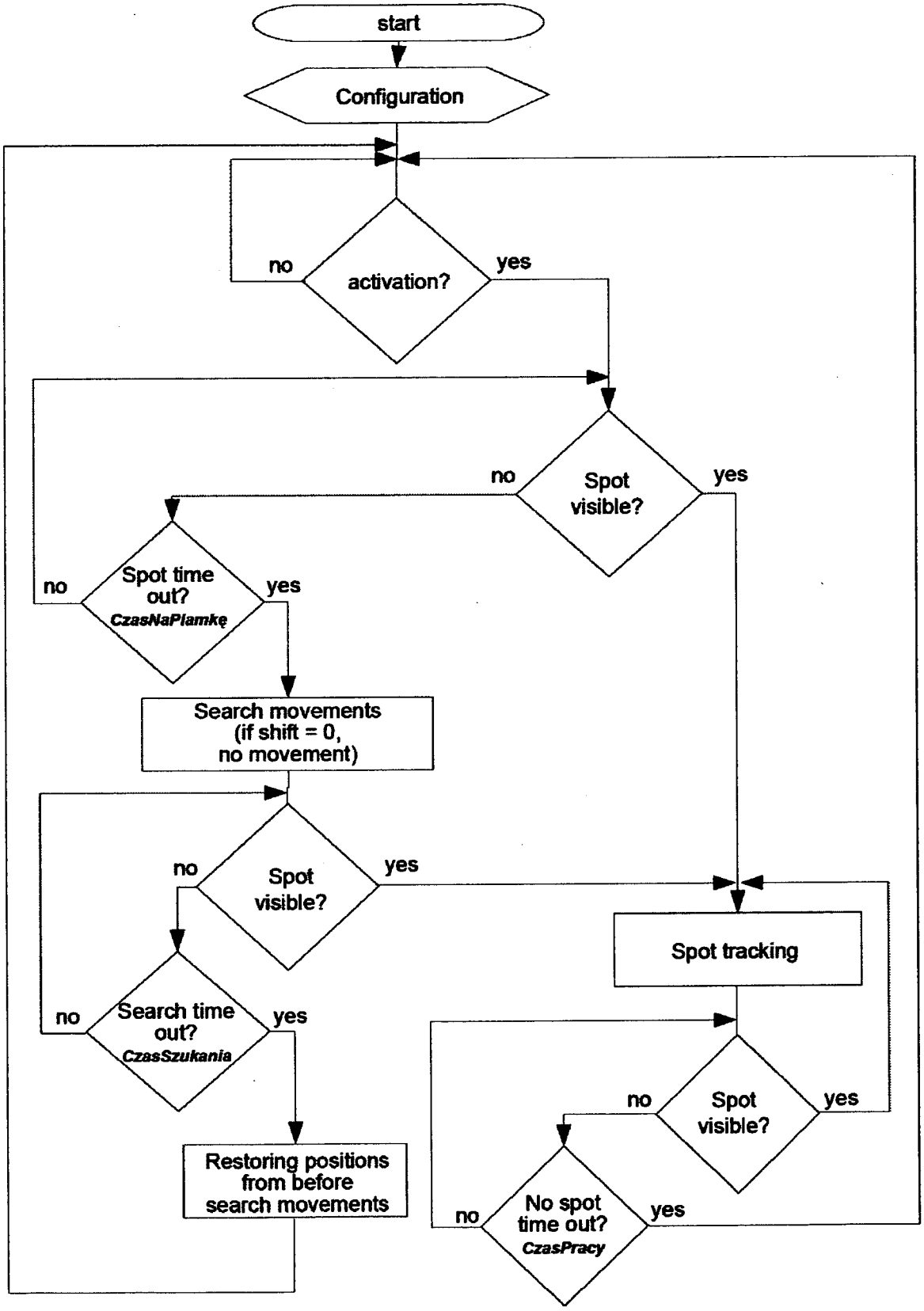
start
Configuration
activation?
no
yes
Spot visible?
no
yes
Spot time out?
CzasNaPlamkę
no
yes
Search movements (if shift = 0, no movement)
Spot visible?
no
yes
Search time out?
CzasSzukania
no
yes
Restoring positions from before search movements
Spot tracking
Spot visible?
no
yes
No spot time out?
CzasPracy
no
yes

Fig. 1

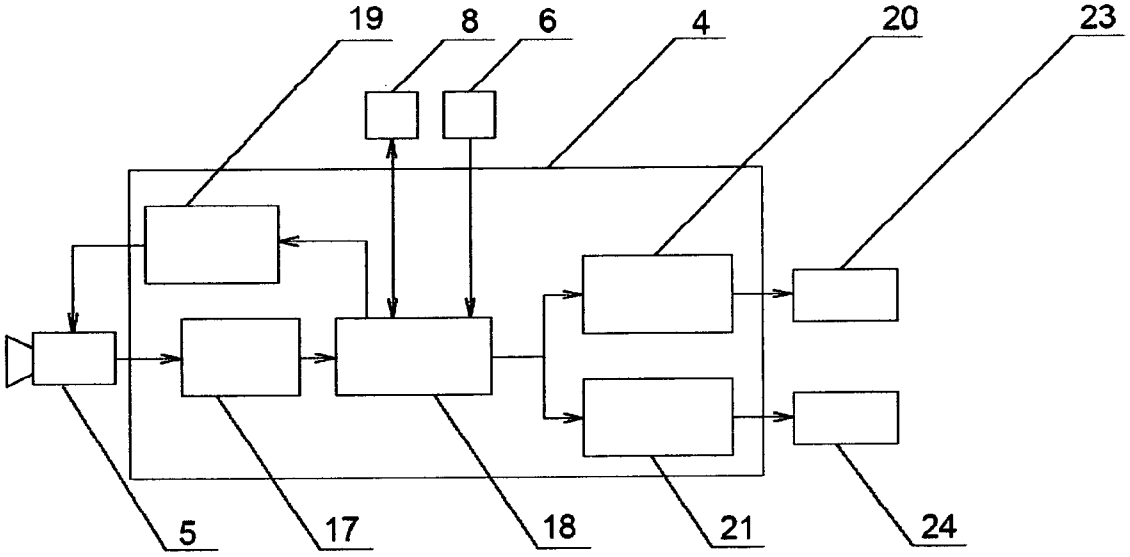

Fig. 2

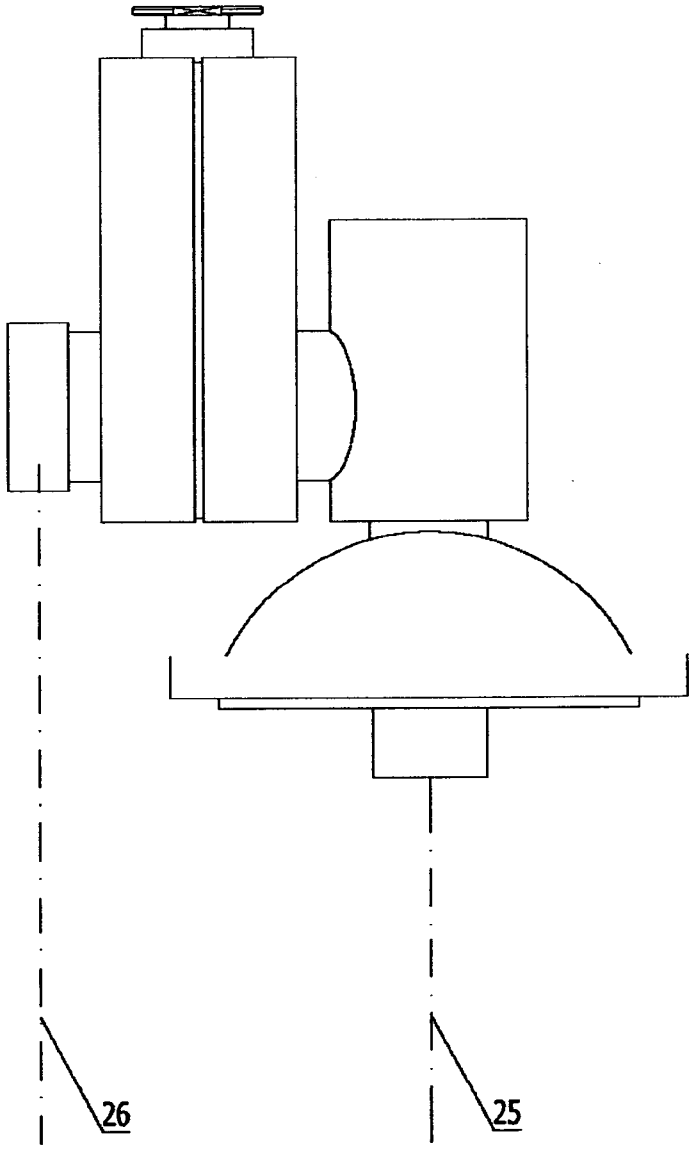

Fig. 3

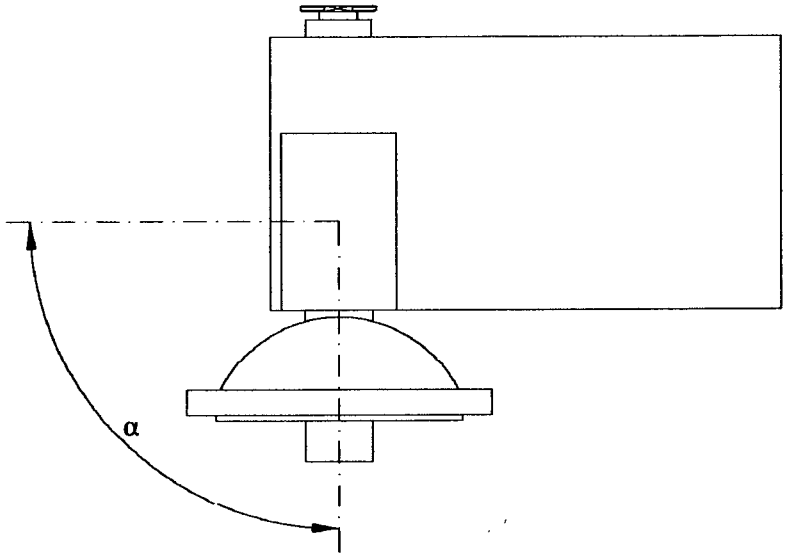

Fig. 4

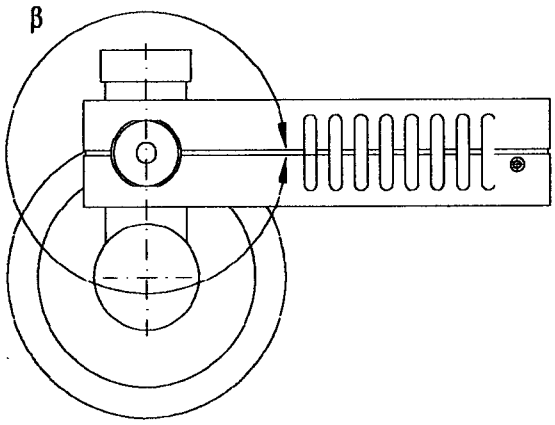

Fig. 5

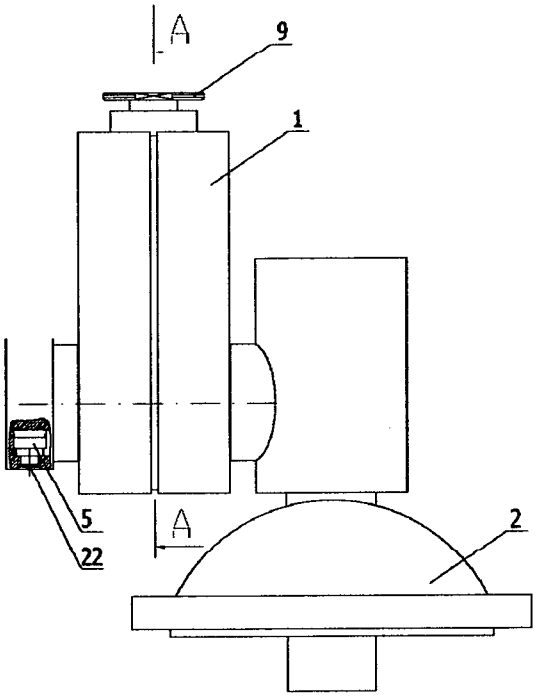

Fig. 6

A – A

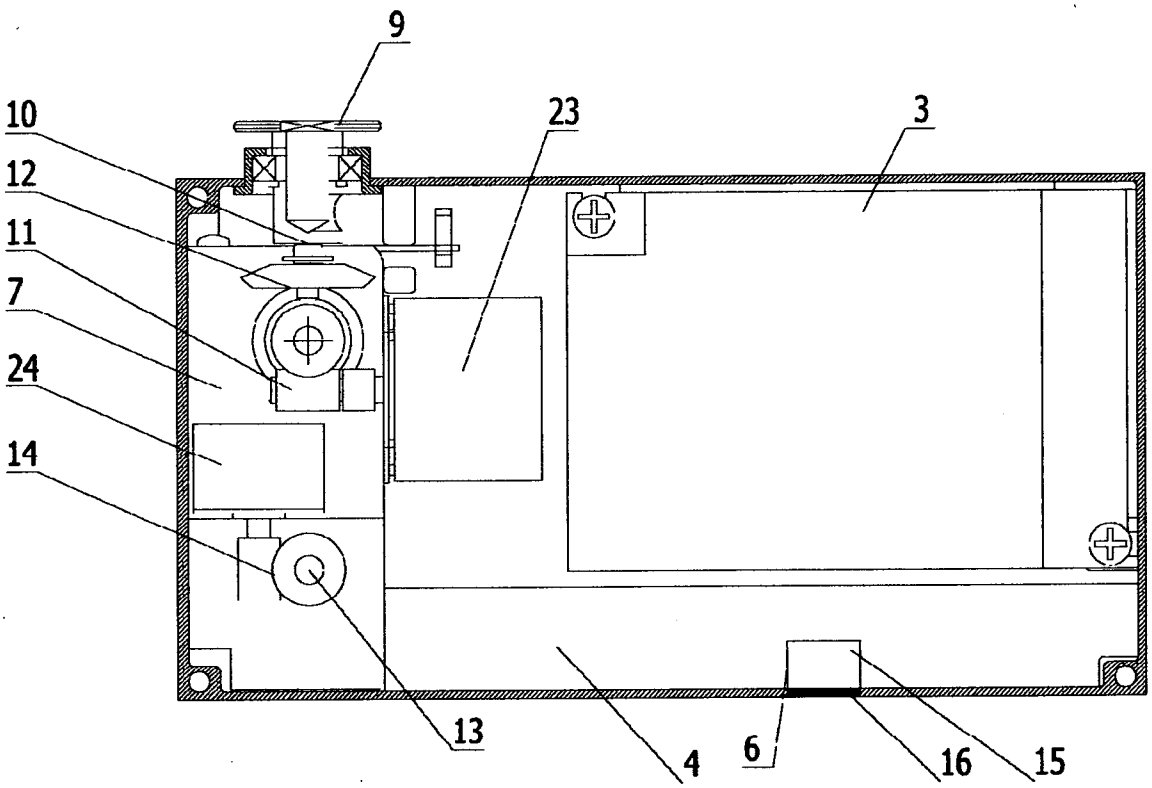

Fig. 7

INTERNATIONAL SEARCH REPORT

International application No
PCT/PL2008/000012

A. CLASSIFICATION OF SUBJECT MATTER
INV. H05B37/02

According to International Patent Classification (IPC) or to both national classification and IPC

B. FIELDS SEARCHED

Minimum documentation searched (classification system followed by classification symbols)
H05B F21S

Documentation searched other than minimum documentation to the extent that such documents are included in the fields searched

Electronic data base consulted dunng the international search (name of data base and where practical, search terms used)

EPO-Internal , WPI Data

C. DOCUMENTS CONSIDERED TO BE RELEVANT

Category*	Citation of document with indication where appropriate, of the relevant passages	Relevant to claim No
X	WO 2006/075298 A (KONINKL PHILIPS ELECTRONICS NV [NL]; VERBRUGH STEFAN M [NL]) 20 July 2006 (2006-07-20)	1,3,5
Y	page 1, line 22 - page 3, line 19; figures 1-5	2,4,6-14
Y	US 4 678 142 A (HIRSCHFELD TOMAS B [US]) 7 July 1987 (1987-07-07) column 2, line 8 - column 3, line 54; figures 1-3	2,4,6-14
A	GB 2 315 852 A (MURTHA TERENCE MICHAEL [GB]; HORRELL CHRISTOPHER JOHN [GB]; SMITH NIGE) 11 February 1998 (1998-02-11) page 5, line 1 - page 7, line 13; figures 1-3	2,5,6,8, 10,14

-/--

[X] Further documents are listed in the continuation of Box C

[X] See patent family annex

* Special categories of cited documents

"A" document defining the general state of the art which is not considered to be of particular relevance

"E" earlier document but published on or after the international filing date

"L" document which may throw doubts on pπonty claιm(s) or which is cited to establish the publication date of another citation or other special reason (as specified)

"O" document referring to an oral disclosure use, exhibition or other means

"P" document published prior to the international filing date but later than the priority date claimed

"T" later document published after the international filing date or priority date and not in conflict with the application but cited to undersla πd the principle or theory underlying the invention

"X" document of particular relevance, the claimed invention cannot be considered novel or cannot be considered to involve an inventive step when the document is taken alone

"Y" document of particular relevance the claimed invention cannot be considered to Involve an inventive step when the document is combined with one or more other such documents, such combination being obvious to a person skilled in the art

"&" document member of the same patent family

Date of the actual completion of the international search	Date of mailing of the international search report
28 May 2008	05/06/2008

Name and mailing address of the ISA/	Authorized officer
European Patent Office, P B 5818 Patentlaan 2 NL -2280 HV RI)SWIJk Tel (+31-70) 340-2040, Tx 31 651 epo nl, Fax (+31-70) 340-3016	Albertsson, Gustav

Form PCT/ISA/210 (second sheet) (April 2005)

INTERNATIONAL SEARCH REPORT

International application No
PCT/PL2008/000012

C(Continuation). DOCUMENTS CONSIDERED TO BE RELEVANT

Category*	Citation of document, with indication, where appropriate, of the relevant passages	Relevant to claim No.
A	EP 1 607 710 A (SAAB AB [SE]) 21 December 2005 (2005-12-21) paragraph [0013] - paragraph [0022]; figure 1	7,9
A	US 2003/107888 A1 (DEVLIN TOM [US] ET AL) 12 June 2003 (2003-06-12)	

INTERNATIONAL SEARCH REPORT

Information on patent family members

International application No
PCT/PL2008/000012

Patent document cited in search report	Publication date	Patent family member(s)	Publication date
WO 2006075298 A	20-07-2006	CN 101103254 A	09-01-2008
us 4678142 A	07-07-1987	NONE	
GB 2315852 A	11-02-1998	NONE	
EP 1607710 A	21-12-2005	US 2006076455 Al ZA 200504857 A	13-04-2006 26^04-2006
US 2003107888 Al	12-06-2003	NONE	