(19) Europäisches Patentamt
European Patent Office
Office européen des brevets

(11) EP 3 560 598 B1

(12) EUROPEAN PATENT SPECIFICATION

(45) Date of publication and mention of the grant of the patent:
18.11.2020 Bulletin 2020/47

(51) Int Cl.:
B02C 17/00 (2006.01) *B03D 1/24* (2006.01)
B03D 1/02 (2006.01) *B03D 1/14* (2006.01)

(21) Application number: **19171247.0**

(22) Date of filing: **26.04.2019**

(54) **CRUSHING AND FLOTATION MACHINE**

BRECH- UND FLOTATIONSMASCHINE

MACHINE DE BROYAGE ET DE FLOTTATION

(84) Designated Contracting States:
AL AT BE BG CH CY CZ DE DK EE ES FI FR GB GR HR HU IE IS IT LI LT LU LV MC MK MT NL NO PL PT RO RS SE SI SK SM TR

(30) Priority: **27.04.2018 PL 42539618**

(43) Date of publication of application:
30.10.2019 Bulletin 2019/44

(73) Proprietor: **Akademia Gorniczo-Hutnicza im. Stanislawa Staszica w Krakowie**
30-059 Krakow (PL)

(72) Inventors:
- **Gawenda, Tomasz**
  31-340 Krakow (PL)
- **Foszcz, Dariusz**
  30-239 Krakow (PL)
- **Saramak, Daniel**
  30-384 Krakow (PL)
- **Krawczykowski, Damian**
  32-061 Przeginia Duchowna (PL)

(74) Representative: **Godlewski, Piotr**
JWP
Rzecznicy Patentowi Dorota Rzazewska sp.k.
Sienna Center
ul. Zelazna 28/30
00-833 Warszawa (PL)

(56) References cited:
EP-A1- 3 025 786 **CN-U- 201 862 462**
DE-C- 888 641 **US-A- 4 134 557**

EP 3 560 598 B1

Printed by Jouve, 75001 PARIS (FR)

Description

[0001] The subject of the invention is a crushing and flotation machine for use in processing raw materials and waste materials.

[0002] Flotation devices are commonly employed in ore processing plants to enrich mineral raw materials. The offer of Flotation Machines for the Mining Industry, developed by Instytut Metali Niezelaznych in Gliwice: https://web.archive.org/web /20180425111320/http://www.imn.gliwice.pl/uploads/files/maszynyflotacyjne_pl.pdf includes many flotation machines for various applications. Their design is essentially similar. The flotation machine chamber is constructed as a cylindrical container with flat or conical bottom. The waste chamber is located in the centre. The feed is supplied through the feeding chamber located e.g. centrally in the top part of the flotation machine, to a space over the aerator. The waste is discharged from the waste chamber located under the aerator. The chamber side is fitted with a circumferential collective trough for foam products that is connected to radial troughs that receive the foam product. The aerator, the main task of which is to mix the pulp within the whole volume of the chamber, disperses pumped air for flotation and generates internal circulation of pulp. It consists of a rotor, balancer and balancer base. Flotation machines include an operation stabilization and adjustment system comprised of a stabilization and adjustment unit of airflow to the aerator and a stabilization and adjustment unit of pulp in the chamber. EP-3025786-A1 and CN-201862462-U disclose agitator mills comprising flotation devices.

[0003] Electromagnetic mills are known wherein the milling process is performed within a fixed working chamber by means of agitating grinders that are ferromagnetic elements moving within a rotating electromagnetic field. In the solutions according to the art, e.g. in the solution disclosed in the Polish patent application P.382610 A1, material to be ground is supplied to the working chamber by gravity, while flow of materials towards the working chamber outlet and collection of the product is also performed by the force of gravity and it is adjusted by way of working chamber inclination. Another examples of electromagnetic mills are disclosed in DE-888641-C and US-5348237-A.

[0004] Polish patent application P.413041 A1 discloses a dry grinding process in an electromagnetic mill with vertical working chamber wherein the material to be ground is supplied by gravity from the top, directly over the working space of a mill that is equipped with rotating agitating grinders. The controlled main stream of gaseous medium, wherein the grinding takes place and that forces reception of the final product, is supplied from the bottom of the working chamber of the mill, below its working space, preferably using negative pressure, hence ensuring rotational movement within the working space of the mill.

[0005] In turn, the Polish patent application P.413042 A1 is of a method of parametrization of pneumatic sorting integrated with a mill wherein the change of grain size is performed by the change of the height hi of the sorting chamber and the level of dispenser opening (multi-sectional preferably) for the collective return flow, and by the change of the height h^2 of the recycled material forming chamber.

[0006] The concept of a crushing and flotation machine that includes an electromagnetic mill with a vertical working chamber in which air is supplied from the bottom, consists in that the electromagnetic mill has an integrated flotation cell built within its top part so that the outlet collector of the electromagnetic mill is guided coaxially through the bottom of the flotation cell, equipped with a discharge nozzle with controlled adjustment valve. The overflow step of the flotation cell is coaxially equipped with an overflow tank fitted with an overflow nozzle, however the suspended matter is fed from the bottom of the electromagnetic mill through a feeding stub pipe connected with a pump. Controlled adjustment valve and pump are co-ordinated by means of signal cables or by a wireless method with a control unit which is, in turn, connected by means of signal cables or by a wireless method with a draff level sensor.

[0007] It is preferred when the flotation cell chamber expands towards the top in order to contain more foam product.

[0008] In order to facilitate the flow of foam product, it is preferred when the overflow tank bottom is inclined 3 to 45 degrees in relation to the horizontal plane. in order to facilitated the flow of foamy product.

[0009] It is also preferred when the flotation cell bottom is inclined 3 to 45 degrees in relation to the horizontal plane.

[0010] Moreover, it is preferred when the length of outlet collector end section, located within the flotation cell chamber, represents 1/4 to 1/3 of the distance between the top edge of the overflow step of the flotation cell chamber and the top edge of the outlet collector.

[0011] Except for the obvious advantage related to reduction of the space necessary to install the machine, direct passage of usable components of metal ore present in the flotation draff directly to flotation precludes their oxidation and translates to better flotation effects. Moreover, agitating grinders, while crushing raw materials, disperse air bubbles and mix these with draff and flotation reagents. Heat generated during the electromagnetic mill operation is absorbed by the slurry, thus it is not necessary to use any additional mill cooling system, however higher temperature of a slurry during enriching provides better effects of the flotation process due to better activity of the flotation reagents. An undoubted advantage of the invention is the elimination of the aerator rotor for mixing the air with draff and reagents, as this was replaced by the agitating grinders moving about during the crushing activity. This advantage is related to energy savings and the lack of need to replace rotor-operating elements.

[0012] The device according to the invention is presented on a schematic drawing in Figure 1. In Figure 2, the device according to the invention is shown as one of the elements of a larger system of devices performing the technological process of grinding and flotation.

[0013] The crushing and flotation machine according to the invention consists of an electromagnetic mill assembly (3) in the form of a tube with circular cross-section that is fitted with a throat from the top that forms the outlet collector (5) and with air supplying holes (4) from the bottom, and a slurry supplying stub pipe connected to the pump (2). The outlet collector (5) of the electromagnetic mill (3) is equipped concentrically with flotation cell (6) so that the outlet collector (4) passes through the flotation cell (6) bottom. The flotation cell (6) is of tube shape with circular cross-section, however, its top part, representing foam tank, has larger diameter than the bottom part, and the change of dimension is gradual along the middle section. The bottom of the flotation cell (6) is inclined 25 degrees to the horizontal plane and ends with an outflow nozzle (9) in the lowest section for a drowning material. The outflow nozzle (9) is fitted with a controlled adjustment valve (10). Length of the section hi of the outlet collector (5), within the flotation cell (6), is 0.3 of the length h_2 between the top edge of the overflow step (7) of the flotation cell (6) chamber and the top edge of the outflow collector (5) of the electromagnetic mill (3). The overflow step (7) of the flotation cell (6) chamber is coaxially equipped with the overflow tank (17) in the form of a pipe of circular cross-section, the bottom of which is inclined 25 degrees from the horizontal plane and is fitted with the overflow nozzle (8) in the lowest section for foam product. The flotation cell (6) chamber includes a draff (11) level sensor connected with the control unit, which, in turn, is connected with the controlled adjustment valve (10) and pump (2).

[0014] For the purpose of detailed description of the invention, the method of its operation will be presented in an arrangement of devices performing a technological process of grinding and flotation The feed together with water and flotation reagents is supplied to slurry tank (1), wherefrom it is pumped via the pump (2) under pressure to the vertical working chamber of the electromagnetic mill (3) wherein the raw material is crushed. Moreover, air is supplied to the slurry via holes (4), the bubbles of which are dispersed together with the slurry by means of moving agitating grinders within the working zone of the electromagnetic mill (3) chamber. Crushed raw material in the form of flotation draff together with air bubbles flows through the outlet collector (5) of the electromagnetic mill (3) and is fed to the flotation cell (6), wherein it is separated as foam product and leaves the flotation cell via the overflow step (7) and then through the overflow nozzle (8), and the chamber product leaves the flotation cell via the outflow nozzle (9), the flow of which is adjusted using the controlled adjustment valve (10). The foam product represents the final product of the crushing and flotation process. Flotation draff flow rate is controlled via pump (2) output operation, which is controlled by means of a control unit based on draff (11) level sensor indications. Adjustment of the pump (2) output is additionally synchronized with operation of the controlled adjustment valve (10) of the outflow nozzle (9), monitored also by the control unit. The chamber product is then directed to the second slurry tank (12) wherefrom it is supplied, via the second pump (13), to the sorting hydrocyclone (14), wherein it is separated to overflow (14a) that is fed outside the system and outflow that is directed to the third tank (15) wherefrom it is discharged, using a stub pipe (15a), as waste, or a fraction containing usable components is pumped back using the third pump (16) to the slurry tank (1), wherefrom it is supplied to the crushing and flotation process.

Claims

1. A crushing and flotation device, intended especially for mineral raw materials, containing an electromagnetic mill (3) with vertical working chamber, which is fed with air from the bottom **characterized in that** the electromagnetic mill (3) has an integrated flotation cell (6) installed in its top part so that an outlet collector (5) of the electromagnetic mill (3) is passed coaxially through the flotation cell (6) bottom that is fitted with an outflow nozzle (9) with a controlled adjustment valve (10), wherein an overflow step (7) of the flotation cell (6) chamber is coaxially fitted within an overflow tank (17) that is equipped with an overflow nozzle (8), and the slurry is supplied from the bottom part of the electromagnetic mill (3) via a supply stub pipe connected with a oump (2), wherein the controlled adjustment valve (10) and the pump (2) are connected using signal cables or by wireless methods with 1 a control unit, which is in turn connected via signal cable or wireless to a draff (11) level sensor.

2. The device according to claim 1, **characterized in that** the flotation cell (6) chamber expands upwards.

3. The device according to claim 1, **characterized in that** the overflow tank (17) bottom is inclined 3 to 45 degrees in relation to the horizontal plane.

4. The device according to claim 1, **characterized in that** the flotation cell (6) chamber bottom is inclined 3 to 45 degrees in relation to the horizontal plane.

5. The device according to claim 1, **characterized in that** the length (hi) of outlet collector (5) end section, located within the flotation cell (6) chamber, represents 1/4 to 1/3 of the distance (h_2) between the top edge of the overflow step (7) of the flotation cell (6) chamber and the top edge of the outlet collector (5).

Patentansprüche

1. Eine Brech- und Flotationsanlage, insbesondere für mineralische Rohstoffe vorgesehen, mit einer elektromagnetischen Mühle (3) mit einer vertikalen Betriebskammer ausgestattet, die am Boden mit Luft gespeist wird, **dadurch gekennzeichnet, dass** die elektromagnetische Mühle (3) eine integrierte Flotationszelle (6) aufweist, die in ihrem oberen Bereich so ausgelegt ist, dass der Ausgangssammler (5) der elektromagnetischen Mühle (3) koaxial durch den Boden der Flotationszelle (6) durchgeführt wird, wobei der Boden mit einer Ausgangsdüse (9) und mit einem gesteuerten Einstellventil (10) versehen ist, wobei ein Überlauf (7) der Kammer der Flotationszelle (6) koaxial in einen Überlauftank (17) eingeführt ist, der mit einer Überlaufdüse (8) ausgestattet ist, und der Schlamm vom unteren Teil der elektromagnetischen Mühle (3) über einen mit einer Pumpe (2) verbundenen Zufuhrstutzen zugeführt wird, wobei das gesteuerte Einstellventil (10) und die Pumpe (2) unter Verwendung von Signalkabeln oder drahtlos mit einer Steuereinheit verbunden sind, die wiederum über ein Signalkabel oder drahtlos mit einem Niveausensor (11) verbunden ist.

2. Anlage nach Anspruch 1, **dadurch gekennzeichnet, dass** die Kammer der Flotationszelle (6) sich nach oben ausdehnt.

3. Anlage nach Anspruch 1, **dadurch gekennzeichnet, dass** der Boden des Überlauftanks (17) horizontal eine Neigung von 3 bis 45 Grad aufweist.

4. Anlage nach Anspruch 1, **dadurch gekennzeichnet, dass** der Boden der Kammer der Flotationszelle (6) horizontal eine Neigung von 3 bis 45 Grad aufweist.

5. Anlage nach Anspruch 1, **dadurch gekennzeichnet, dass** die Länge (hi) des Endabschnitts am Ausgangsammler (5), der sich innerhalb der Kammer der Flotationszelle (6) befindet, 1/4 bis 1/3 des Abstands (h_2) zwischen der Oberkante des Überlaufs (7) der Kammer der Flotationszelle (6) und der Oberkante des Ausgangssammlers (5) beträgt.

Revendications

1. Dispositif de broyage et de flottation, spécialement conçu pour les matières premières minérales, contenant un broyeur électromagnétique (3) avec chambre de travail verticale, alimenté en air par le bas, **caractérisé en ce que** le broyeur électromagnétique (3) a une cellule (6) de flottation intégrée installée dans sa partie supérieure de sorte qu'un collecteur (5) de sortie du broyeur électromagnétique (3) est passé coaxialement à travers le fond de la cellule (6) de flottation qui est équipé d'une buse de sortie (9) avec une vanne de réglage commandée (10), dans lequel une étape (7) de trop-plein de la chambre de cellule (6) de flottation est implémentée coaxialement à l'intérieur d'un réservoir (17) de trop-plein qui est équipé d'une buse de trop-plein (8), et les boues sont acheminées depuis la partie inférieure du broyeur électromagnétique (3) via un tuyau d'alimentation raccordé à une pompe (2), dans lequel la vanne de réglage commandée (10) et la pompe (2) sont connectées u moyen de câbles de signal ou par des procédés sans fil avec une unité de commande, qui est à son tour connectée via un câble de signal ou sans fil à un capteur (11) de niveau de résidus.

2. Dispositif selon la revendication 1, **caractérisé en ce que** la chambre de la cellule (6) de flottation s'étend vers le haut.

3. Dispositif selon la revendication 1, **caractérisé en ce que** le fond du réservoir (17) de trop-plein est incliné de 3 à 45 degrés par rapport au plan horizontal.

4. Dispositif selon la revendication 1, **caractérisé en ce que** le fond de la chambre de la cellule (6) de flottation est incliné de 3 à 45 degrés par rapport au plan horizontal.

5. Dispositif selon la revendication 1, **caractérisé en ce que** la longueur (hi) de la section d'extrémité du collecteur (5) de sortie, située à l'intérieur de la chambre de la cellule (6) de flottation, représente de 1/4 à 1/3 de la distance (h_2) entre le bord supérieur de l'étape (7) de trop-plein de la chambre de la cellule (6) de flottation et le bord supérieur du collecteur (5) de sortie.

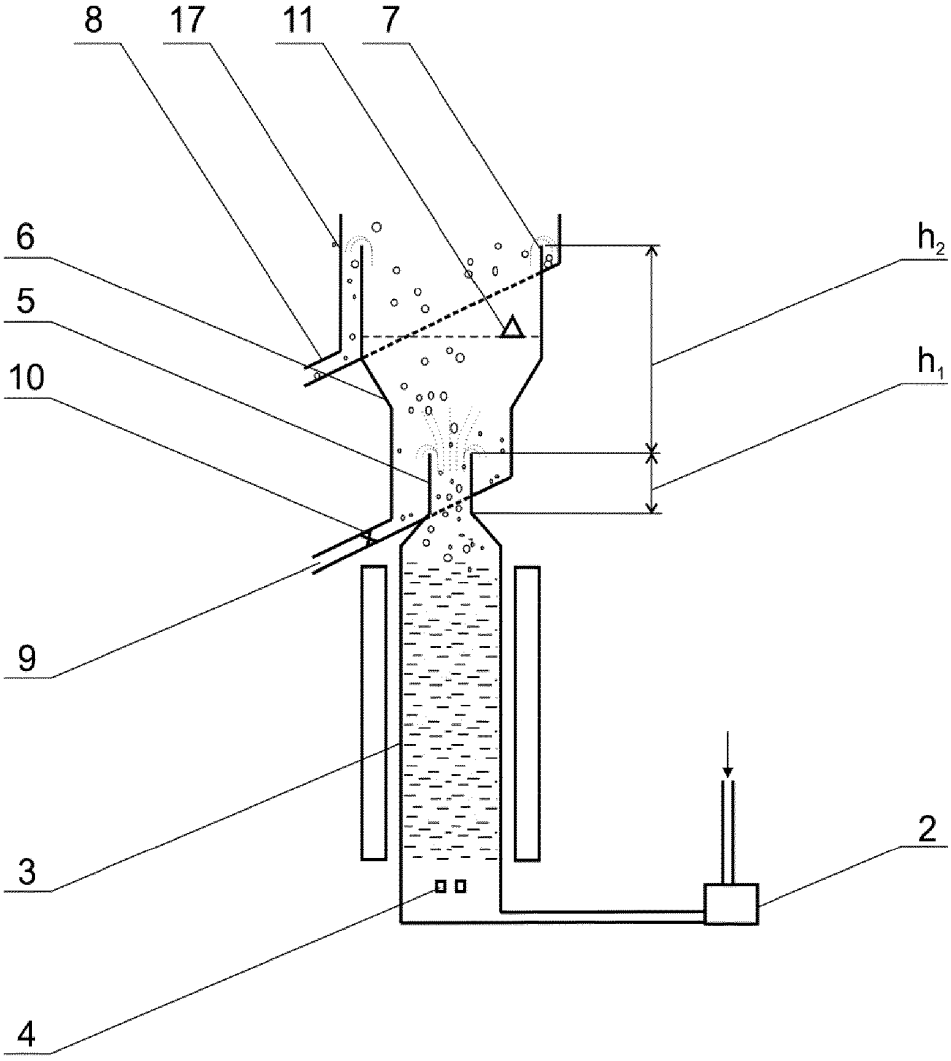

Fig. 1

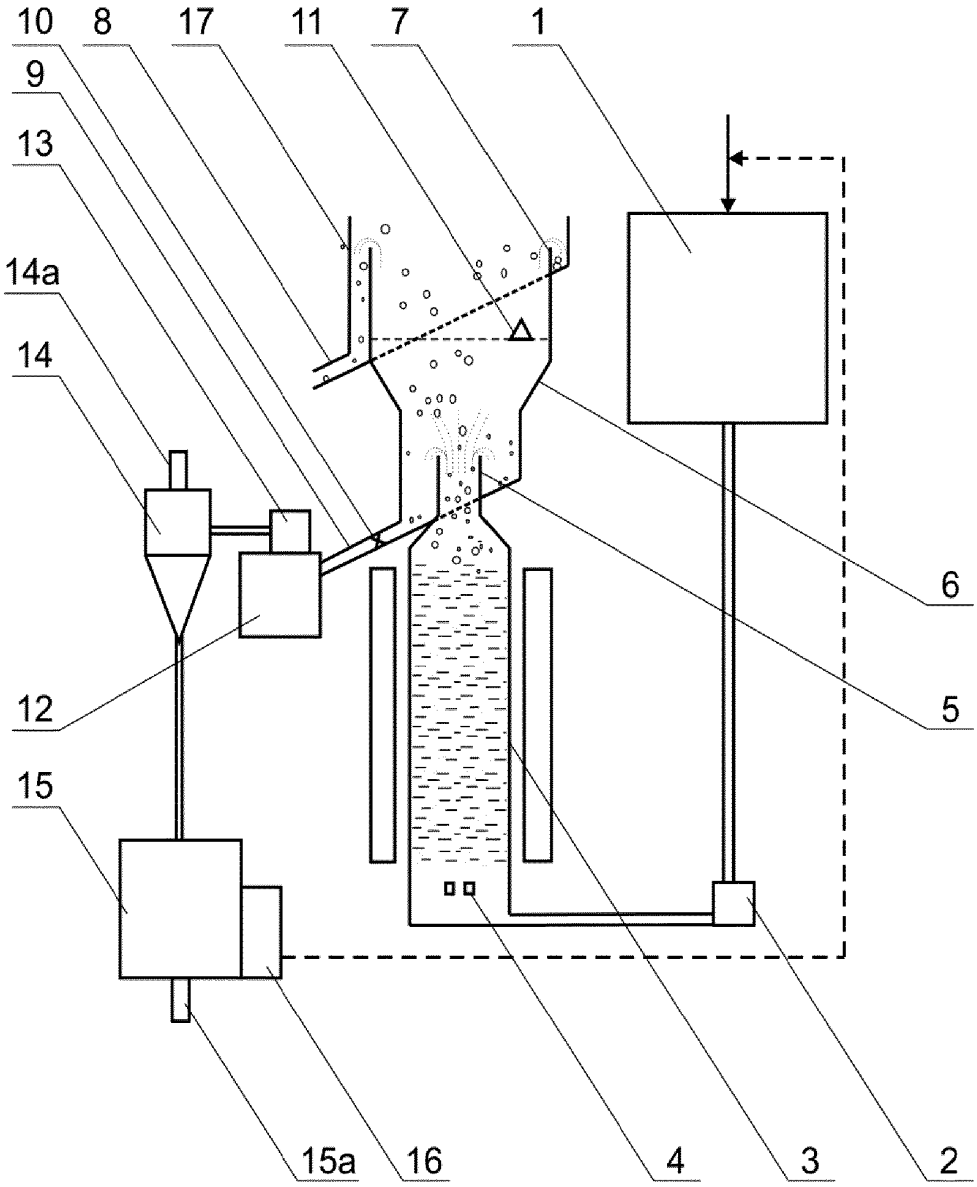

Fig. 2

REFERENCES CITED IN THE DESCRIPTION

This list of references cited by the applicant is for the reader's convenience only. It does not form part of the European patent document. Even though great care has been taken in compiling the references, errors or omissions cannot be excluded and the EPO disclaims all liability in this regard.

Patent documents cited in the description

- EP 3025786 A1 **[0002]**
- CN 201862462 U **[0002]**
- PL P382610 A1 **[0003]**
- DE 888641 C **[0003]**
- US 5348237 A **[0003]**
- PL P413041 A1 **[0004]**
- PL P413042 A1 **[0005]**