(19) Europäisches Patentamt
European Patent Office
Office européen des brevets

(11) EP 2 689 868 A2

(12) **EUROPEAN PATENT APPLICATION**

(43) Date of publication:
29.01.2014 Bulletin 2014/05

(51) Int Cl.:
B22C 5/04 *(2006.01)* ***B22C 5/06*** *(2006.01)*
B22C 5/08 *(2006.01)*

(21) Application number: **13460038.6**

(22) Date of filing: **24.06.2013**

(84) Designated Contracting States:
AL AT BE BG CH CY CZ DE DK EE ES FI FR GB GR HR HU IE IS IT LI LT LU LV MC MK MT NL NO PL PT RO RS SE SI SK SM TR
Designated Extension States:
BA ME

(30) Priority: **25.07.2012 PL 40013112**

(71) Applicant: **Akademia Górniczo-hutnicza Im. Stanis Awa Staszica**
30-059 Krakow (PL)

(72) Inventors:
- **Danko, Józef**
  30-150 Kraków (PL)
- **Holtzer, Mariusz**
  31-235 Krakow (PL)
- **Danko, Rafal**
  30-147 Kraków (PL)
- **Holtzer, Grzegorz**
  31-235 Kraków (PL)
- **Kuzmin, Jerzy**
  45-273 Opole (PL)
- **Matuszewski, Krzysztof**
  45-312 Opole (PL)
- **Przybyla, Karol**
  46-073 Chróscina (PL)

(74) Representative: **Magonska, Alina**
AMAG Kancelaria Patentowa
Alina Magonska
ul. Dobrego Pasterza 108/106
PL-31-416 Krakow (PL)

(54) **The device for vibratory reclamation of used up foundry sand**

(57) The device consists of the serially connected: vibratory reclaimer and pneumatic classifier (21). The reclaimer has got pipe-cylindrical vertical column (2), ended at the top by the batch tank (3). Inside, there are built up, at intervals, from the top to the bottom: the crusher grid (4), two horizontal sieves: upper (5) and central (6), as well as the lower conical sieve (7). The space of the conical sieve (7) behind the screening side surface is closed off by the bottom ring (8), over which in the side wall there is the pour-out hole (9), led to the transport trough (16). The transport trough (16) is rigidly mounted to the column (2) and rises in spiral fashion along its side surface. At the top end, it is swept externally through the channel (19) led to the feeding screw (20), which through the pour-out is connected to the upper section of the pneumatic cascade classifier (21). Below the conical sieve (7), over the column bottom (11), there is the buffer chamber (10) with the placed crushing-abrasive elements (13) in the form of metal balls. Tangentially to the column (2), below the bottom, there are mounted two generators of vibrations in the form of the rotodynamic motors (14), through their axes of rotation, situated in planes parallel to the column axis and askew to that axis, in perpendicular projection. The transport trough (16) throughout its height is covered externally by the pipe shield (17), which is provided with the connection piece (18), connected with the exhausting installation, preferably, of the cascade classifier (21).

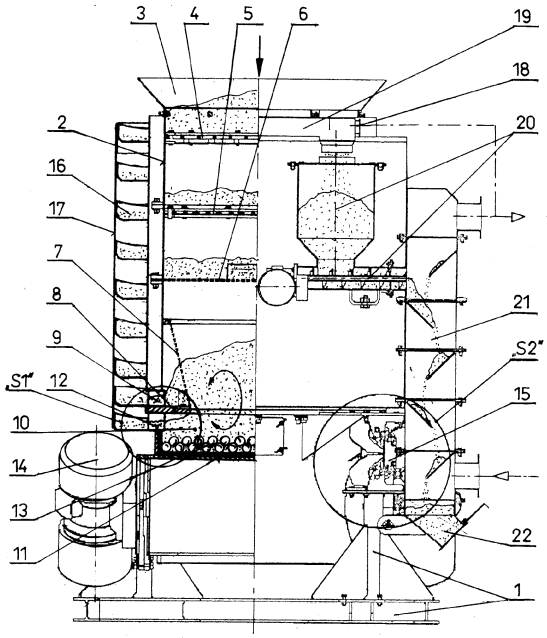

FIG.1

EP 2 689 868 A2

Description

[0001] The object of the invention is the device for vibratory reclamation of spent moulding sand and core sand, used for reclaiming sand grains from compounds of various adhesives.

[0002] The known technologies of reclaiming used up moulding sands make use of various reactions which in the end are to bring about the destruction and separation from sand grains, thermal layers of used up adhesive. In conditions of dry, vibratory reclamation, an intensive abrasive effect is produced, which makes this technology universal in its application, likewise for the difficult-to-reclaim sands with water-glass hardened by CO_2 esters, and sands with resol resins. One of such devices, featured in the Polish patent description PL157972, has got a longitudinally symmetrical tank set on elastic elements, spurred into vibration by rotational vibrator with axis parallel to longitudinal caving in the work surface, of the built up in tank, strip screen. Lower section of the tank is filled with crushing-abrasive elements. In the side walls of the tank, parallel to vibrator axis and over the section filled with crushing-abrasive elements, there are pour-out holes, which are connected with troughs additionally covered by inertia-type crushing-abrasive elements.

[0003] Another device, known from the description of the invention US7735653 has got a boxlike body, with built-up inside at intervals one on top of the other, numerous sieves with gradually decreasing meshes. The body mounted on elastic suspensions in a frame; is moved to produce generally vertical vibrations by two rotodynamic motors. The motors of the vibrators are mounted to the bottom of the body, being parallel to each other, perpendicular, and slanted, in line with the direction of the slanting of the sieves. On one side of the body, in the direction of the slanting of the sieves, there is a pour-out of the reclaimed sand grains, and on the other side, a pour-out of waste material. The internal space of the body box is vented. The rotodynamic motors rotate in opposite directions - which makes possible selecting a given operation mode of the device. With both of the motors operating simultaneously, the reclamation process proceeds; operation of one of the motors shifts reclaimed sand grains towards frontal pour-out, and activation of the other one removes waste material through the rear pour-out. The slanting of the sieves is adjusted.

[0004] In the solutions of reclaimers that are known of, the vibrations are generally directed rectilinearly and in accordance with the main direction of sand shifting - which limits the pathway of abrasive reactions generally to length of sieve. From the description US4906356 we are also familiar with the device for vibratory screening of used up moulding sand, containing cylindrical, vertically situated casing, topped by feeding hopper. Inside, there are built up at intervals, at least two sieves with gradually decreasing meshes. At the bottom, the casing is closed off by bottom section with pour-out hole, and to the side surface of the casing there are mounted at least two generators of vibrations in the form of rotodynamic motors, which through their axes of rotation are situated in planes parallel to the casing axis and askew to that axis, in perpendicular projection. The outcome of motors being mounted in such manner is torsional reaction of vibrations and circumferentially-spiral pathway of screening and abrasion of the feed of compound.

[0005] The reclaimer according to this invention, by availing of the characteristics of the above-mentioned solutions, stands out in that sense, that the pour-out holes of treated sand from the spurred into torsional vibrations cylindrical reclaiming column with a few sieves, are connected with transport trough, rigidly mounted and rising in a spiral fashion along the cylindrical side surface of the column. At the top end, the transport trough is swept externally through channel being led to the feeding screw. The pour-out of the feeding screw is connected to the upper section of pneumatic cascade classifier, built up on the same frame of base as the reclaimer.

[0006] It is advantageous when the transport trough throughout its height is covered externally by pipe shield, and which in the upper section is provided with connection piece being connected with exhausting installation, preferably, of cascade classifier.

[0007] It is also advantageous, when the device has got two horizontal sieves: upper sieve and central sieve, as well as lower conical sieve, the space of which behind the screening side surface - ended at the bottom with a hole in smaller base of cone - is closed off by bottom ring. Over the bottom ring, there is pour-out hole which is led to transport trough, and below the conical sieve, over the column bottom, buffer chamber is situated with crushing-abrasive elements in the form of metal balls, placed on the column bottom.

[0008] In another, yet equally advantageous device execution model, in the side wall of the buffer chamber, a second pour-out hole is produced, led into the transport trough, the lower edge of which is situated over the column bottom at a height of no less than two diameters of crushing-abrasive balls.

[0009] The noise which accompanies the device operation is significantly reduced, when the bottom and adjacent side walls of the buffer chamber are covered by elastic-silencing material, preferably rubber.

[0010] The horizontal upper and central sieves can be flat or else can assume the shape produced from circularly adjacent to one another, even number of circular sectors having diameter of the column. When looking down on it, the screening surfaces produced from these sectors have got upper edges of walls swept down and intersecting along the lower edge, which is situated in line with bisector of central angle of each sector.

[0011] The integration of reclamation measures on vibratory sieves, in the buffer chamber, on spiral hoist of the vented transport trough, and in the pneumatic classifier, makes the reclamation seat compact in its construction - which, at a highly advantageous read-out of productivity in relation to built-up area, makes that device

a preferred option for small and medium-sized foundries which use a variety of foundry sands. Intensive cooling conditions enable for treating used sand with elevated temperature. An essential role in acquiring high purity and homogeneity of reclaimed sand grains is played by the transport trough with abrasive-cooling effect and preliminary exhausting that covers the distance approximately 30 times greater than that of the column diameter.

[0012] The invention is explained by the description of a model execution of the device, featured on diagram; where Fig. 1 presents the device in half-section, Fig. 2 from the side, Fig. 3 from the top, Fig. 4 and Fig. 5 zoom in on features S1 and S2 marked on Fig. 1, Fig.6 and Fig.7 - vertical section and view from the top of the horizontal sieves with the rising/falling surface, respectively.

[0013] On the frame of base 1 there are mounted, the essential, serially connected in the flow of the treated moulding sand, device assemblies: the column 2 of the reclaimer, the feeding screw 20, and the cascade classifier 22. The cylindrical column 2 consists of three vertical pipe sections, connected by flange. On the upper section there is mounted the batch tank 3, the bottom part of which consists of the crusher grid 4. Between the sections, at flange connection intervals there are built up two horizontal sieves with flat riddles and gradually decreasing meshes: the upper sieve 5 and the central sieve 6. The mesh clearances of the upper sieve 5 are of equal dimension to a half of the clearance of the crusher grid 4, and the central sieve 6 has got meshes 4 to 5 times smaller than the meshes of the upper sieve 5. In the side wall of the column 2 over the upper sieve 5 and the central sieve 6, inspection openings are found. Below the central sieve 6, the conical sieve 7 is built up, with palisade, screening side surface, ended at the bottom by hole in the smaller cone base. The clearances between vertical rods of the palisade of the conical sieve 7 are 1.25 to 1.5 mm in dimension, and the height of the sieve is such so as to suit the planned rate of productivity. The space behind the conical sieve 7 is closed off at the bottom by the bottom ring 8. Over the bottom ring 8, in the side wall of the column 2, there are the pour-out holes 9 led outside using a short channel. Below the conical sieve 7, over the column bottom 11, there is the buffer chamber 10 with the placed at the bottom 11, crushing-abrasive elements 13 in the form of metal balls. The volume of the buffer chamber 10 corresponds to a given quantity of foundry sand reclaimed at nominal productivity rate during an approximately 15-minute-long device operation. In accordance with the Fig. 1 and Fig. 4, the buffer chamber 10 can have on side wall the second pour-out hole 12, led out by channel, the lower edge of which is situated above the column bottom 11 at a height h of no less than two diameters d of crushing-abrasive 13 balls. The bottom 11 and the adjacent side walls of the buffer chamber 10 are covered by a layer of rubber, silencing the noise from the striking of the balls. The device can effectively operate only with the pour-out hole 9 being situated behind the conical sieve 7 - then, a part of the sand reclaimed in the buffer chamber 10 shifts vertically in the deposit and is mixed with the sand falling down from the sieves. Below the bottom 11, tangentially to the reinforced lower part and outside the column 2, there are mounted two generators of vibrations in the form of rotodynamic motors 14. The motors 14 through their axes of rotation are situated in planes parallel to the axis of the column 2 and askew to that axis in perpendicular projection. The column 2 is mounted on the frame of base 1 using oscillatory supports15, structured in such a way so that the column 2 may produce torsional vibrations evoked by operation of the rotodynamic motors 14. The operation of the rotodynamic motors 14 is adjusted with the use of inverter with adjustable frequency and amplitude of vibrations. The exciting force is set periodically with respect to a given type of the reclaimed sand. The pour-out holes 9 and 12 are connected, through short channels with coaxial cylindrical casing, with the column 2, on which is wound and rigidly mounted the transport trough 16, rising in a spiral fashion along the side surface of the column 2. The transport trough 16 throughout its height is covered externally by the pipe shield 17. At the upper end, the transport trough 16 is swept externally through the channel 19, led to the feeding screw 20, the operation of which is adjusted by the inverter with adjustable frequency. The pour-out of the feeding screw 20 is connected to the upper section of the pneumatic cascade classifier 21, built up on the frame of base 1. The shield 17 of the transport trough 16 in the upper section is provided with the connection piece 18 connected with exhausting installation of the cascade classifier 21. The cascade classifier 21 is fed by the lower connection piece with air from high-pressure blast fan, controlled by the inverter according to signals coming from measurement system, with the objective of acquiring required velocity of air.

[0014] The horizontal sieves 5 and 6 may be executed as flat or else with the rising-falling riddle surfaces. In the view from the top, the screening surfaces are then made from circularly adjacent to one another even number of circular sectors ω having diameter of the column 2, whereas the sides of which constitute upper edges k1 of the walls swept down and intersecting along the lower edge k2, situated in line with bisector of central angle ω of each sector. The geometry of the sieves is adjusted to suit optimal abrasive effect while taking into account the existing flows of the reclaimed sand.

The listing of markings on the diagram

[0015]

1. frame of base
2. column
3. batch tank
4. crusher grid
5. upper sieve
6. central sieve

7. conical sieve
8. bottom ring
9. first pour-out hole
10. buffer chamber
11. column bottom
12. second pour-out hole
13. crushing-abrasive elements
14. rotodynamic motor
15. oscillatory support
16. transport trough
17. shield
18. blowdown connection piece
19. channel
20. feeding screw
21. cascade classifier
22. classifier bolt

h. height of lower edge of the second pour-out hole
k1 upper edge of the horizontal sieves
k2. lower edge of the horizontal sieves
ω. central angle of the sector

Claims

1. The device for vibratory reclamation of used up foundry sand, containing vibratory reclaimer serially connected with the pneumatic classifier, and in which the reclaimer has got pipe-cylindrical vertical column, ended at the top with the batch tank, and inside of which there are built up at intervals from the top to the bottom: the crusher grid, at least two sieves with gradually decreasing meshes, and at the bottom, closed-off by the column bottom, over which, in the side wall there is at least one pour-out hole, whereas tangentially to the column below the bottom, there are mounted at least two generators of vibrations in the form of rotodynamic motors, through the axes of rotation situated in planes parallel to the column axis and askew to that axis, in perpendicular projection, **characterised in that** the pour-out holes (9, 12) are connected with the transport trough (16), rigidly mounted and rising in a spiral fashion along the side surface of the column (2), and on the top end swept externally through the channel (19), led to the feeding screw (20), which through the pour-out is connected to the upper section of the pneumatic cascade classifier (21), built up on the same as the reclaimer, frame of base (1).

2. The device according to claim 1 **characterised in that** the transport trough (16) throughout its height is covered externally by the pipe shield (17).

3. The device according to claim 2 **characterised in that** in the upper section the shield (17) has got the connection piece (18) connected with the exhausting installation, preferably, of the cascade classifier (21).

4. The device according to claim 1 **characterised in that** it has got two horizontal sieves: upper (5) and central (6) as well as the lower conical sieve (7), the space of which behind the screening side surface - ended at the bottom with hole in smaller base of cone - is closed off by bottom ring (8) over which there is the pour-out hole (9) led to the transport trough (16), and below the conical sieve (17), over the column bottom (11), there is the buffer chamber (10) with the placed at the column bottom (11), crushing-abrasive elements (13) in the form of metal balls.

5. The device according to claim 4 **characterised in that** in the side wall of the buffer chamber (10) there is executed the second pour-out hole (12), led to the transport trough (16), the lower edge of which is situated over the column bottom (11) at a height (h) of no less than two diameters of balls of crushing-abrasive element (13).

6. The device according to claim 4 or 5 **characterised in that** the bottom (11) and the adjacent side walls of the buffer chamber (10) are covered by elastic-silencing material, preferably rubber.

7. The device according to claim 1 or 4 **characterised in that** the horizontal sieves (5, 6) when viewed from the top, have got the screening surfaces made from circularly adjacent to one another even number of circular sectors (ω) having diameter of the column (2), the sides of which constitute upper edges (k1) of the walls swept down and intersecting along the lower edge (k2), which is situated in line with bisector of central angle (ω) of each sector.

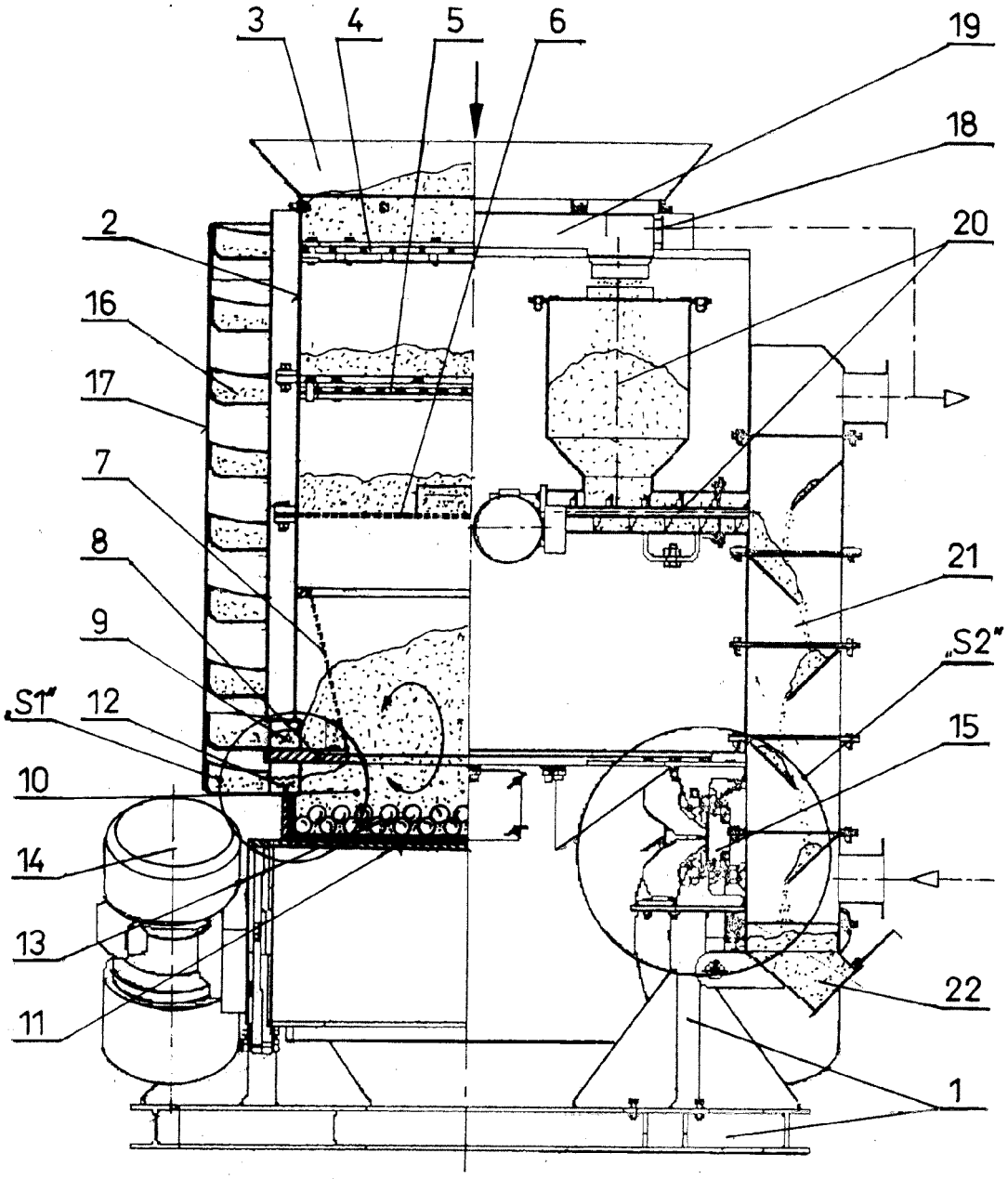

FIG.1

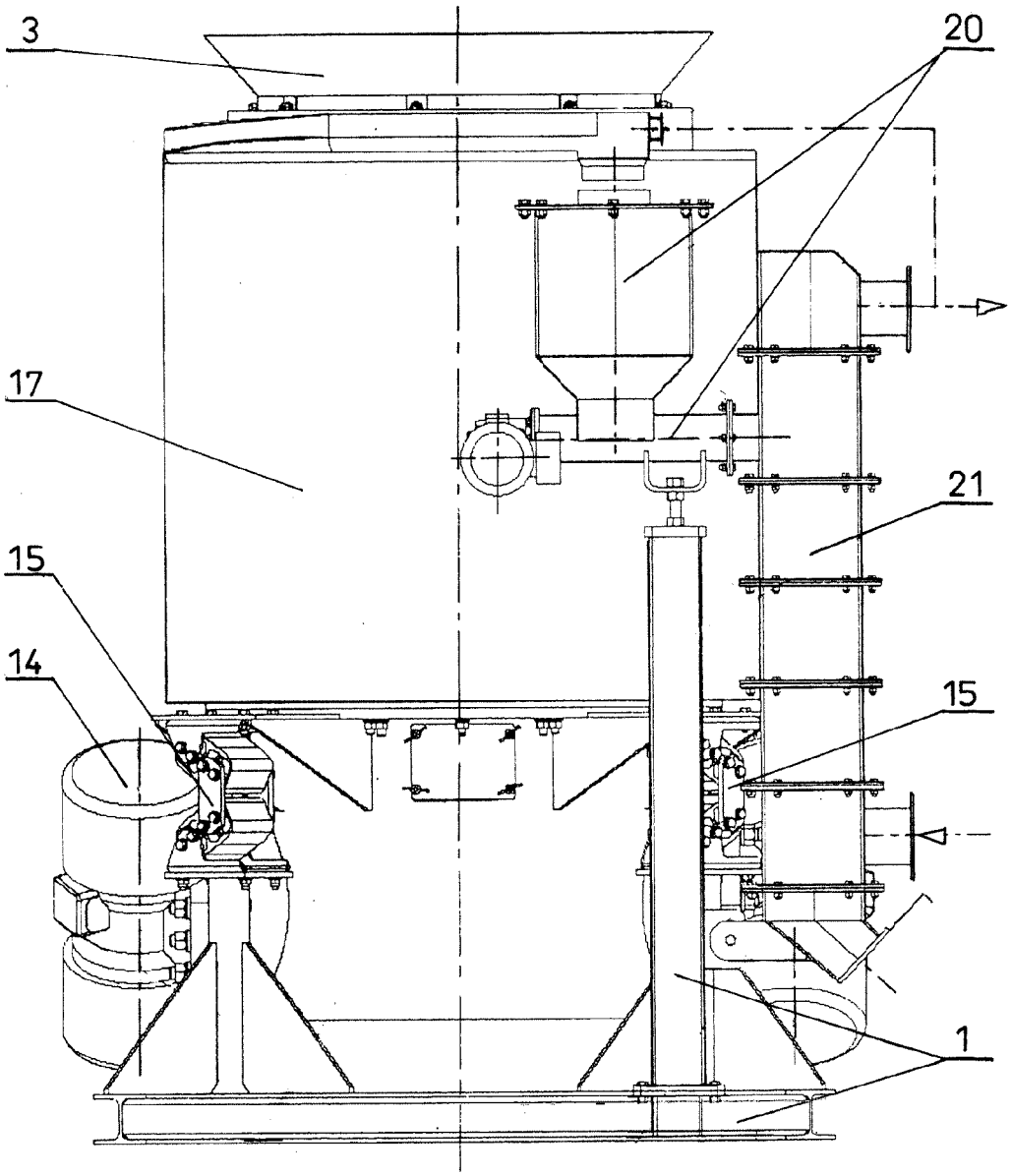

FIG. 2

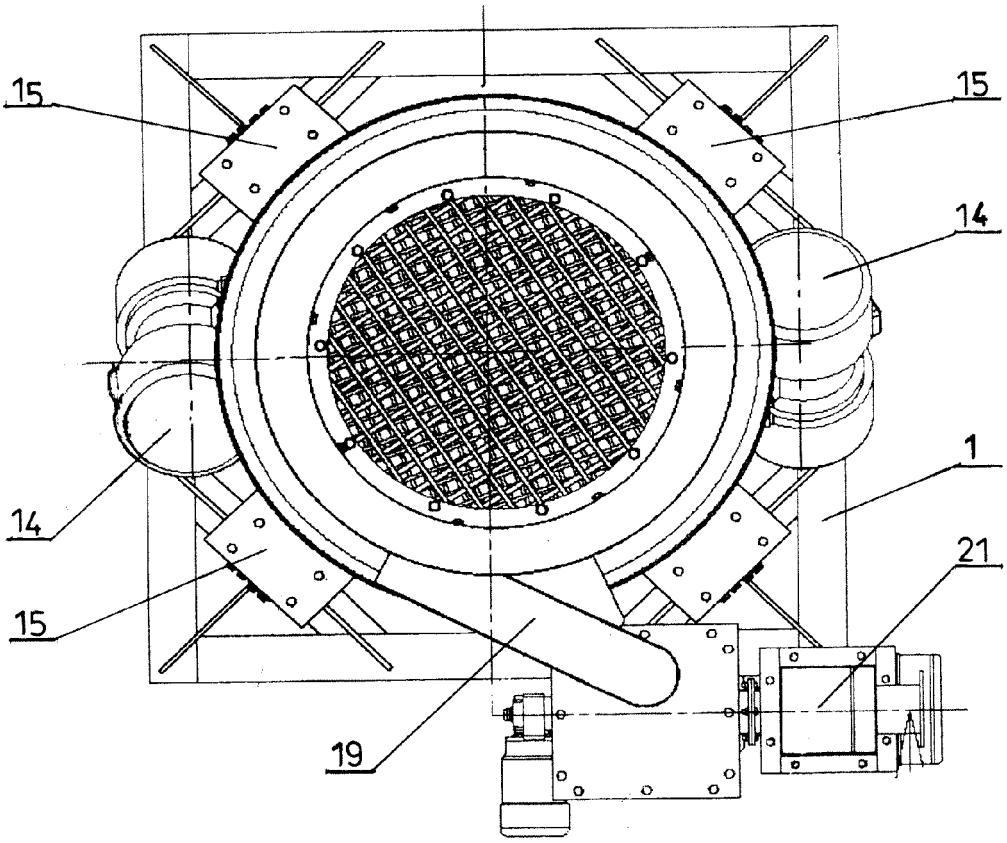

FIG.3

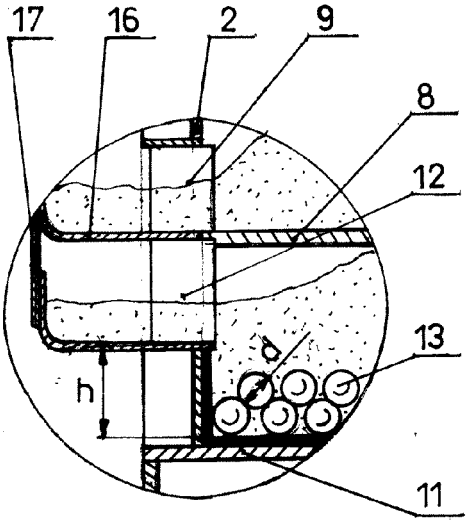

FIG.4

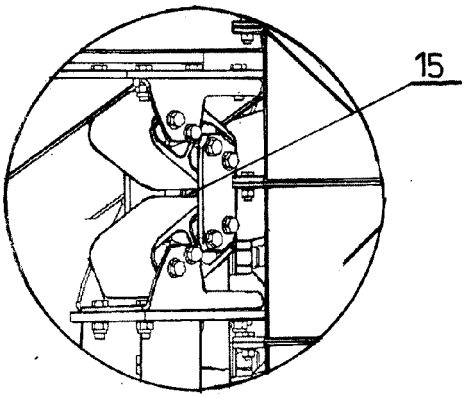

FIG.5

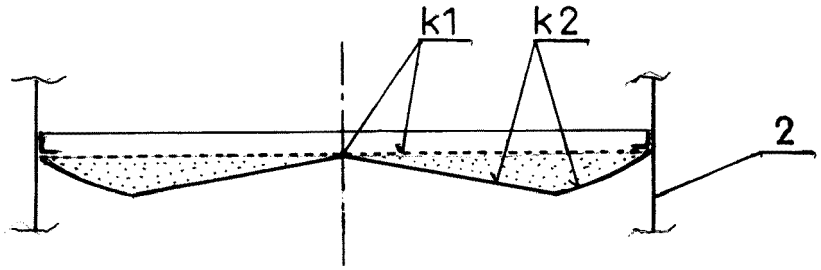

FIG.6

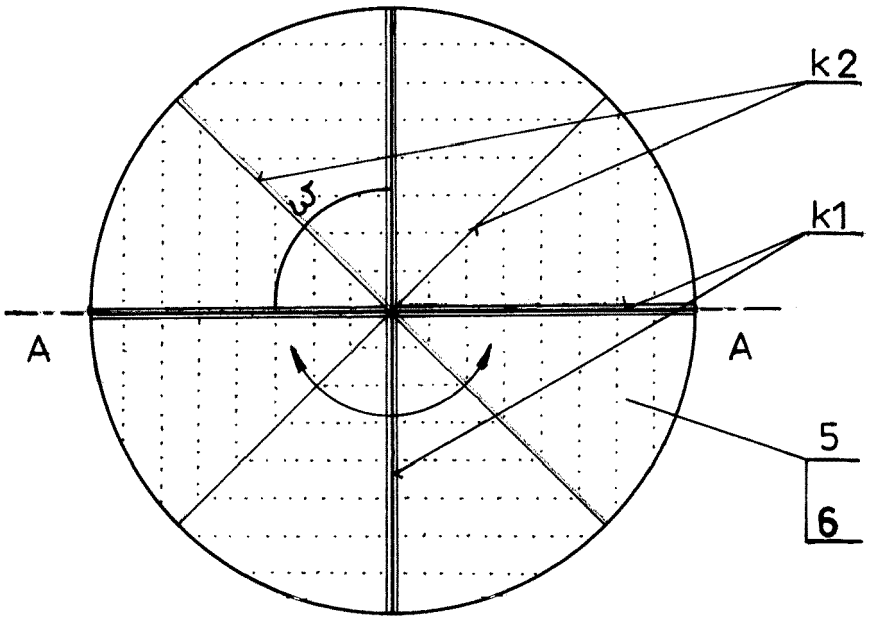

FIG.7

REFERENCES CITED IN THE DESCRIPTION

This list of references cited by the applicant is for the reader's convenience only. It does not form part of the European patent document. Even though great care has been taken in compiling the references, errors or omissions cannot be excluded and the EPO disclaims all liability in this regard.

Patent documents cited in the description

- PL 157972 **[0002]**
- US 7735653 B **[0003]**
- US 4906356 A **[0004]**